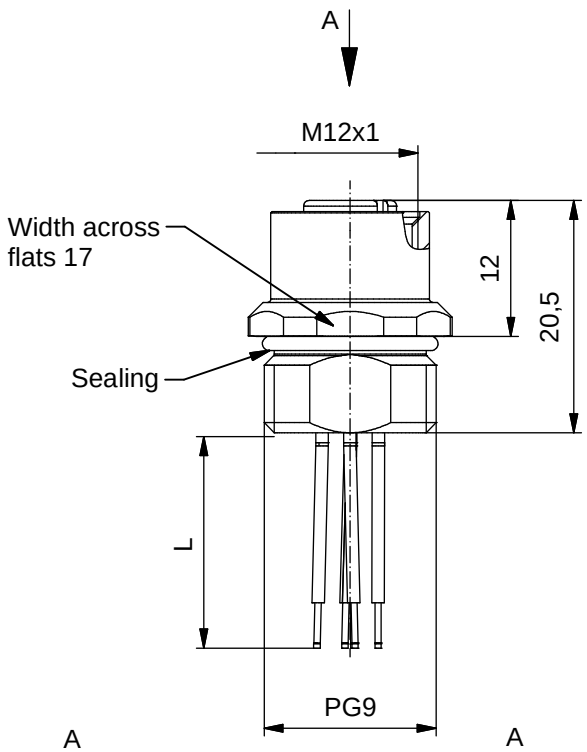


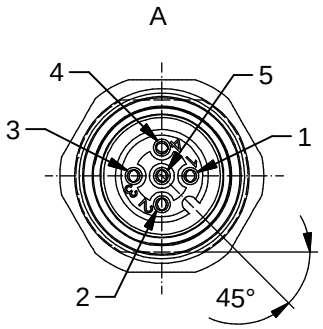


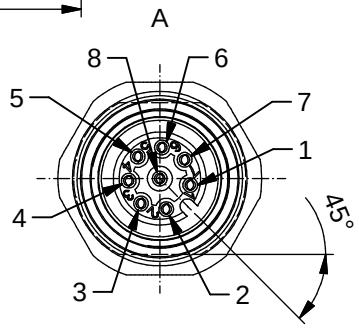


**Technical specification:**

| | | | |
|---|---|---|---|
| Rated voltage:<br>IEC 61076-2-101 | 4pos<br>250 V | 5pos<br>60 V | 8pos<br>30 V |
| Current rating:<br>IEC 61076-2-101 | 4/5pos<br>4 A at 40℃ | 8pos<br>2 A at 40℃ | |
| Insulation resistance:<br>IEC 60512 | >=100 MΩ | | |
| Pollution degree:<br>IEC 60664-1 | 3/2 | | |
| Degree of protection:<br>IEC 60529 | IP 69K, in<br>mated condition | | |
| Temperature range:<br>EN 60512-11-10<br>EN 60512-11-4 | -30℃ ... +105℃<br>-40℃<br>-40℃ ... +85℃ | | |
| Mating cycles:<br>IEC 60512-9a | >=100 | | |

**Wire specification:**

| | |
|---|---|
| Temperatur range<br>static<br>flexibel | <br>-30℃ ... +80℃<br>-10℃ ... +80℃ |

**Materials:**

| | |
|---|---|
| Contact: | CuZn, Ni b / Au 0,2 gal. |
| Contact carrier: | PP GF, UL 94 HB |
| Sealing: | FPM |
| Socket housing: | 1.4404, stainless steel |
| Grouting: | Polyurethane-resin, UL 94 |

**Installation specification:**

| | |
|---|---|
| Recommended torque: | 1-1,2 Nm |
| Conec installation tool: | Torque wrench:<br>36-000200<br>Insert across flats 17:<br>36-000230 |

**Contact assignment:**

1) brown
2) white
3) blue
4) black
5) green-yellow

**Contact assignment:**

1) white
2) brown
3) green
4) yellow
5) grey
6) pink
7) blue
8) red

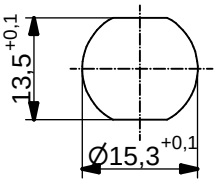


Minimum wall thickness 1,5mm, alternativ panel cut-out d=15,3

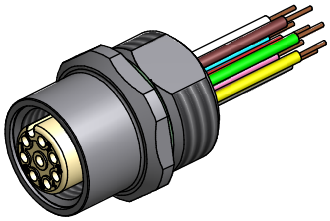

| Part no: | Description: | Pos | Length L: | Wire: |
|---|---|---|---|---|
| 43-01103 | SAL - FB - 12 - FK4 - 0,5 - 9 | 4 | 0,5m | AWG 24 PVC, UL |
| 43-xxxxx | SAL - FB - 12 - FK4 - ... - 9 | 4 | x | |
| 43-01105 | SAL - FB - 12 - FK5 - 0,5 - 9 | 5 | 0,5m | |
| 43-xxxxx | SAL - FB - 12 - FK5 - ... - 9 | 5 | x | |
| 43-02452 | SAL - FB - 12 - FK8 - 0,5 - 9 | 8 | 0,5m | |
| 43-xxxxx | SAL - FB - 12 - FK8 - ... - 9 | 8 | x | |

DO NOT ALTER CAD DRAWING BY HAND

RoHS & REACH compliant

Index c: 26.01.16 rch Ä5944
Data sheet revised, article 8pos added

tolerance of wire: L <= 0,5m: L + 20mm; L > 0,5m: L + 4%

general tolerance: 0 ± 0,50mm; 0,0 ± 0,25mm; 0,00 ± 0,10mm; ∡ ± 1,5°

THIS DRAWING MAY NOT BE COPIED OR REPRODUCED IN ANY WAY, AND MAY NOT BE PASSED ON TO A THIRD PARTY WITHOUT WRITTEN PERMISSION. OWNERSHIP AND COPYRIGHT OF CONEC GmbH

dim. in mm

| | date | name |
|---|---|---|
| drawn | 20.02.07 | Fromm |
| appd. | 06.03.07 | Mankopf |

title:

Female socket M12x1 with wire, frontmounting, FB, PG9

dwg no:

43K1A349

part no: