ITEM NO.	PART NUMBER	DESCRIPTION	QTY.	NOTES
1	TLY-1P	NEMA 1-15P, polarized	1	black overmold
2	30-00242	2C, 18 AWG, UL SPT-1, 300V, 105°C, 5.55 mm, VW-1, PVC	1	terminates to stripped and tinned

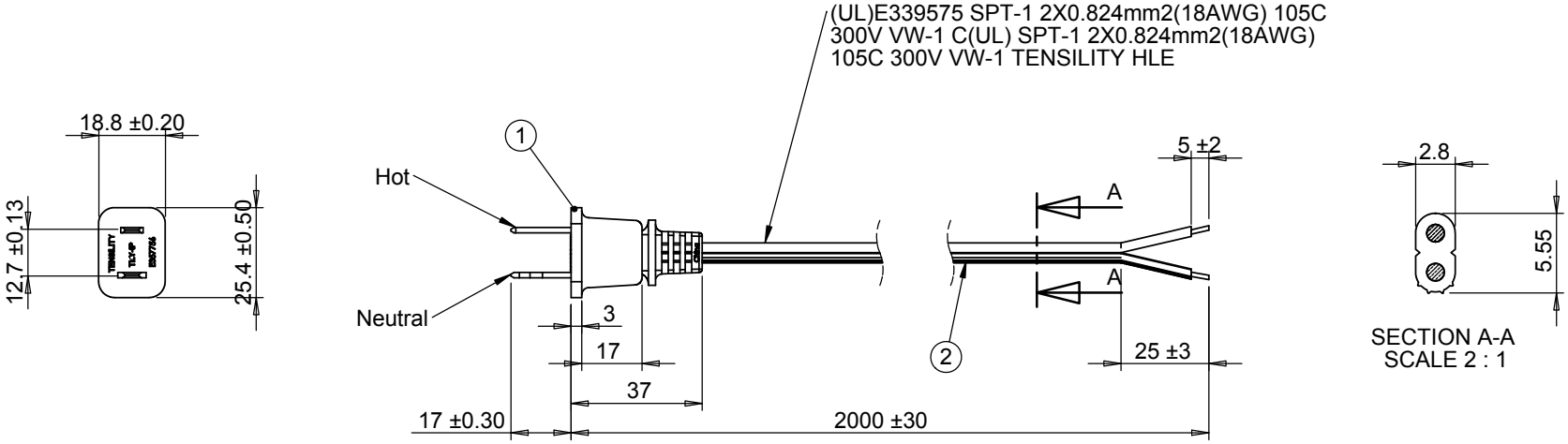

Wiring diagram	
Contact	Wire
Neutral	Grooved
Hot	Smooth

Revision	Date	Description
A	12/17/2012	Initial release

Notes

Cable rated for 10 A at 125 Vac as is.

RoHS, REACH and Dodd-Frank conflict materials compliant

Function test: no open, no reversed polarity, no short circuit, no INT

TENSILITY

20802 Sockeye Place #130
Bend, OR 97701 USA
tel **541.323.3228** *fax* **541.323.4202**
800 **877.670.7118** **www.tensility.com**

DIMENSIONS ARE IN MILLIMETERS

TOLERANCES:
X: ± 0.5 mm
X.X: ± 0.3 mm
X.XX: ± 0.05 mm

DESCRIPTION:
Ac cord, 2000 mm, U.S, NEMA 1-15P plug, TLY-1P to tinned, 18 AWG, SPT-1 wire, 30-00242

SIZE	Part number
A	**11-00011**

SCALE:1:2	WEIGHT:	SHEET 1 OF 1

5 4 3 2 1