THIS DRAWING IS UNPUBLISHED. RELEASED FOR PUBLICATION 20
© COPYRIGHT 20 BY - ALL RIGHTS RESERVED.

REVISIONS					
P	LTR	DESCRIPTION	DATE	DWN	APVD
	E1	REVISED PER ECO-12-009124	15MAY2012	DD	RL
	E2	REVISED PER ECO-14-016022	23OCT2014	DD	RL

KEYING OPTIONS (SHOWN WITH CPA)

KEYING OPTION: A

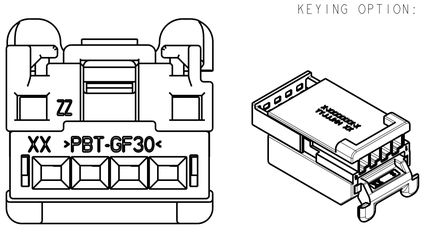

SCALE 2:1

KEYING OPTION: B

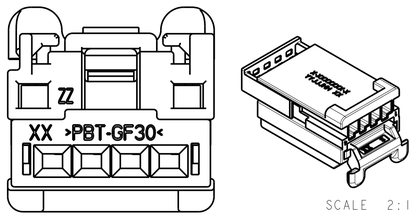

SCALE 2:1

KEYING OPTION: C

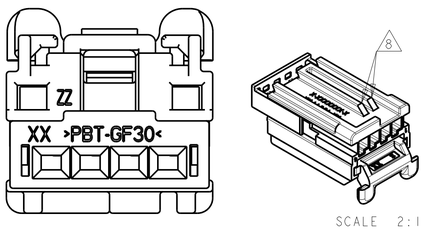

SCALE 2:1

KEYING OPTION: D

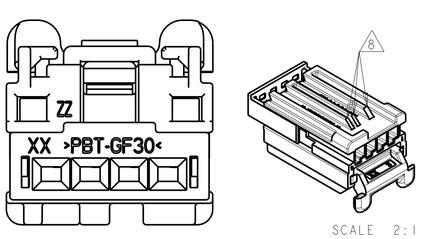

SCALE 2:1

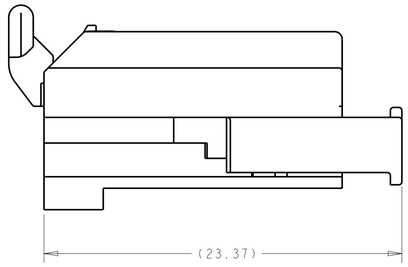

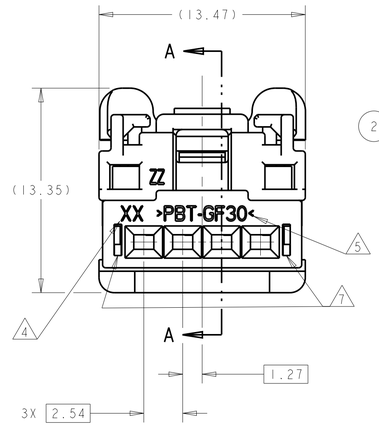

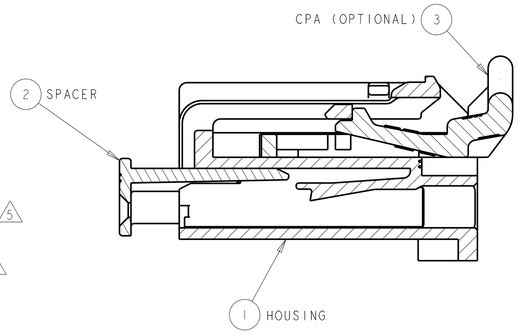

SECTION A-A

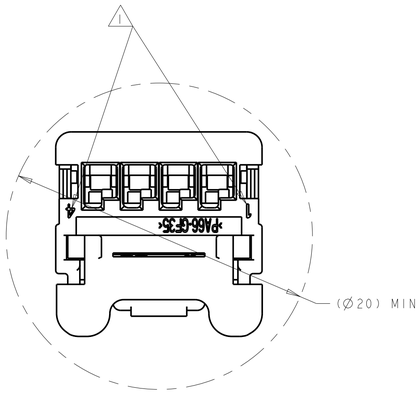

WORST CASE THRU CONDITION

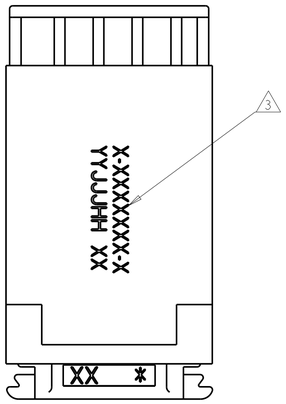

1. CIRCUIT IDENTIFICATION NUMBERS, LOCATED AS SHOWN.
2. SPACER AND CPA ARE SHIPPED IN PRE-ASSEMBLED POSITION.
3. PART NUMBER, DATE CODE AND WORK CENTER LOCATION .
4. CAVITY ID.
5. MATERIAL IDENTIFICATION.
6. PACKING: CONNECTOR ASSEMBLIES BULK PACKAGED IN CARDBOARD BOX.
7. OPTIONAL SLOTS FOR MOLD CONSTRUCTION.
8. 45° LEAD IN ANGLE OPTIONAL TYPICAL FOR ALL KEYS.
9. SPACER IS SHIPPED IN PRE-LOADED POSITION. SOME SPACERS MAY BECOME FULLY SEATED DURING SHIPPING. USE TE INSTRUCTION SHEET 408-10104 TO REPOSITION SPACER BACK TO IT'S PRE-LOADED POSITION.
10. REFER TO TE INSTRUCTION SHEET 408-8599 FOR PROPER CONTACT ASSEMBLY/DISASSEMBLY AND CONNECTOR MATING/UN-MATING PROCEDURE.

1456983-8	1456983-7	1456983-6	1456983-5	1456983-4	1456983-3	1456983-2	1456983-1	<-------- ASSEMBLY PN			
1	-	1	-	1	-	1	-	CPA	>PBT-GF20<	RED	3
1	1	1	1	1	1	1	1	SPACER	>PBT-GF30<	RED	2
1	1	-	-	-	-	-	-	HOUSING; KEY D	>PA66-GF35<	BLACK	1
-	-	1	1	-	-	-	-	HOUSING; KEY C	>PA66-GF35<	BLACK	
-	-	-	-	1	1	-	-	HOUSING; KEY B	>PA66-GF35<	BLACK	
-	-	-	-	-	-	1	1	HOUSING; KEY A	>PA66-GF35<	BLACK	
QTY REQ'D PER ASSY								DESCRIPTION	MATERIAL	COLOR	ITEM NO

PARTS LIST

THIS DRAWING IS A CONTROLLED DOCUMENT.

DIMENSIONS: mm

TOLERANCES UNLESS OTHERWISE SPECIFIED:
0 PLC ±-
1 PLC ±-
2 PLC ±-
3 PLC ±-
4 PLC ±-
ANGLES ±-

MATERIAL: SEE TABLE
FINISH: -

DWN R. VESTAL 13DEC2006
CHK D. STRAUSSER 13DEC2006
APVD D. STRAUSSER 13DEC2006
PRODUCT SPEC -
APPLICATION SPEC -
WEIGHT -

TE Connectivity

NAME: 1X4 POSITION, GET FEMALE CONNECTOR UNSEALED ASSEMBLY

SIZE	CAGE CODE	DRAWING NO	RESTRICTED TO
A1	00779	C-1456983	-

CUSTOMER DRAWING | SCALE 5:1 | SHEET 1 OF 1 | REV E2

4805 (3/13)