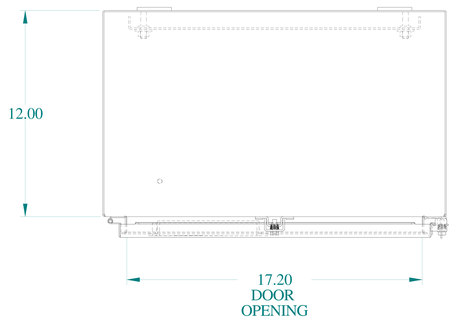

TOP VIEW

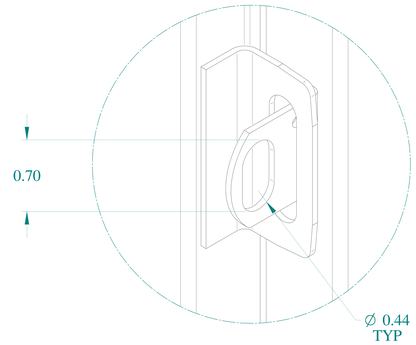

DETAIL Z

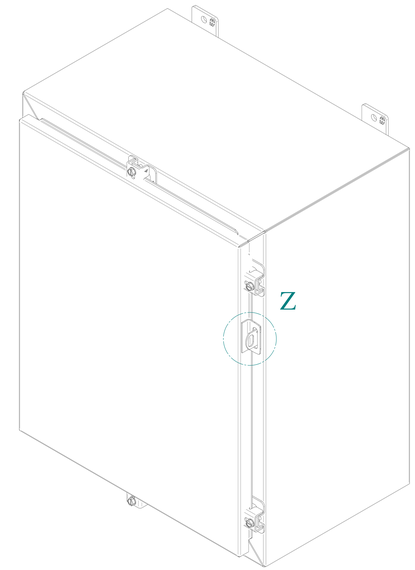

ISOMETRIC VIEWS

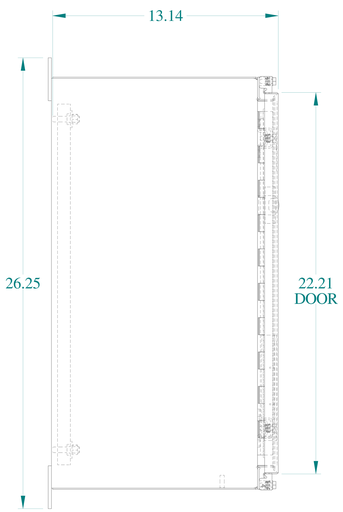

SIDE VIEW

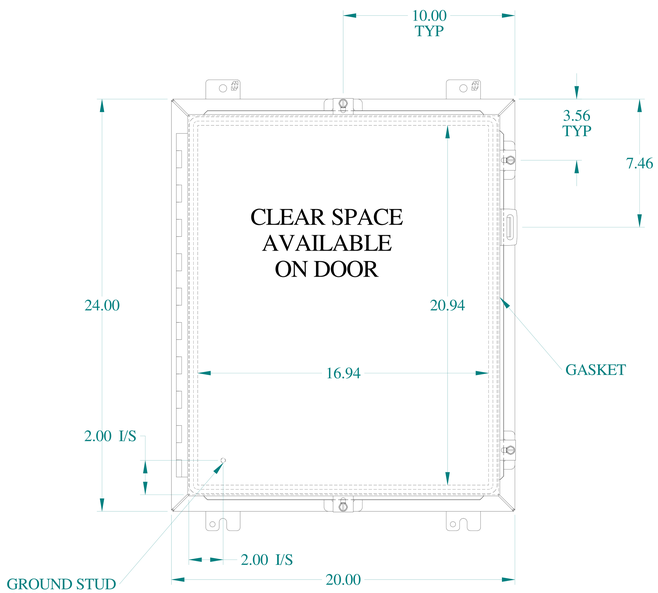

FRONT VIEW

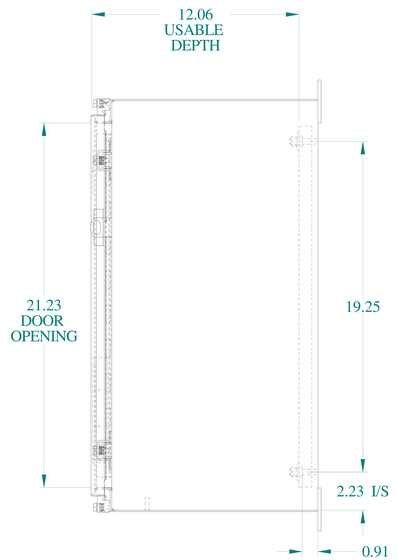

SIDE VIEW

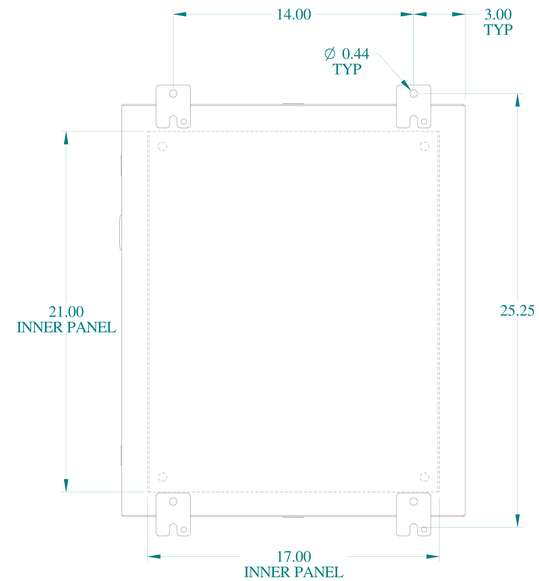

BACK VIEW

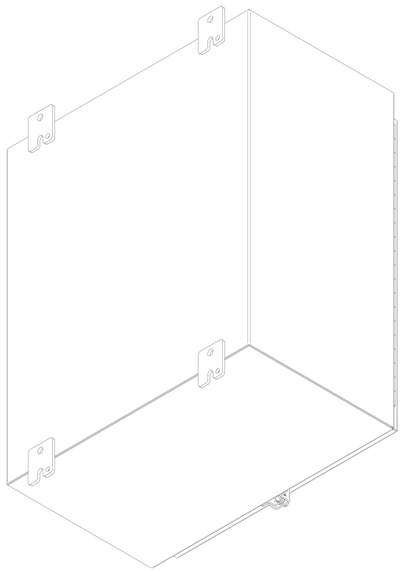

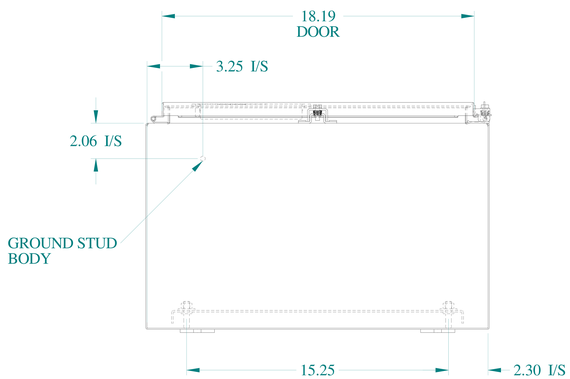

BOTTOM VIEW

HAMMOND MANUFACTURING®

www.hammondmfg.com

Data subject to change without notice.

Part # : 1418N4E12	Date : Mar. 24, 2019

Link:www.hammfg.com/1418N4E12