Apr.1.2017 Copyright 2017 HIROSE ELECTRIC CO., LTD. All Rights Reserved.

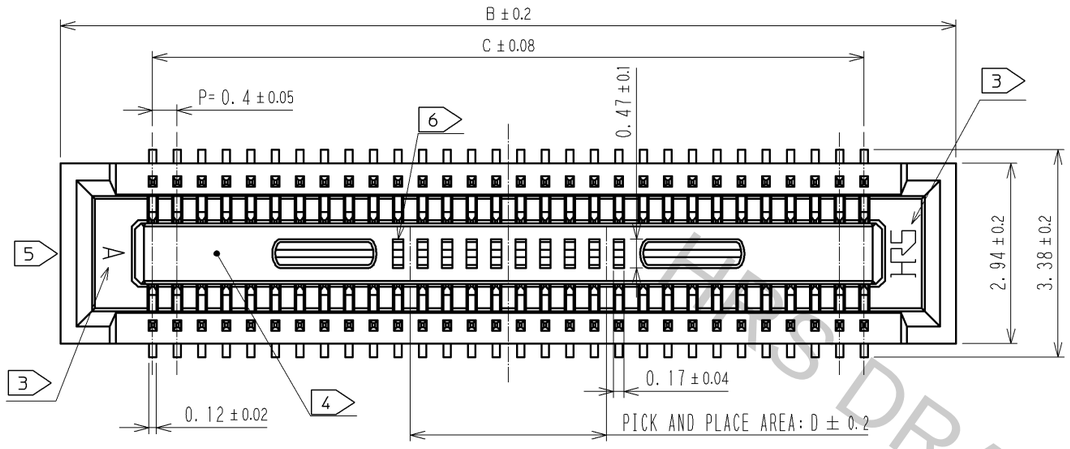

RECOMMENDED PATTERN

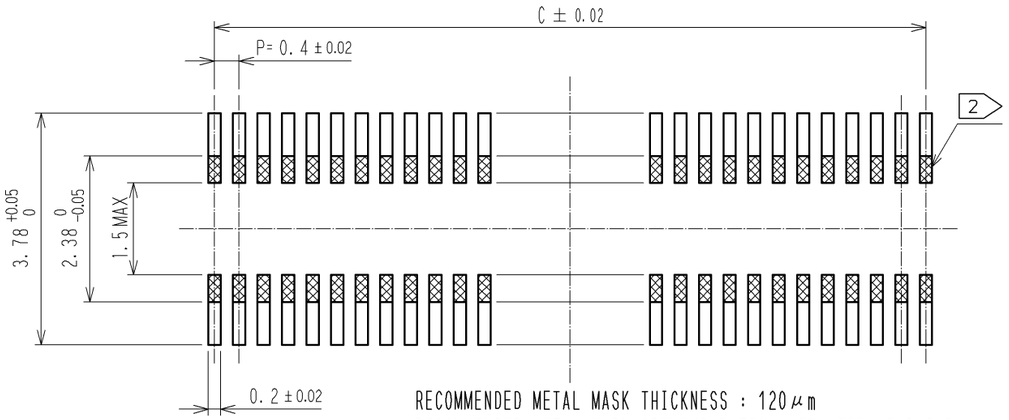

RECOMMENDED METAL MASK THICKNESS : 120μm
RECOMMENDED METAL MASK OPENING RATIO : 80% FOR LEAD PAD

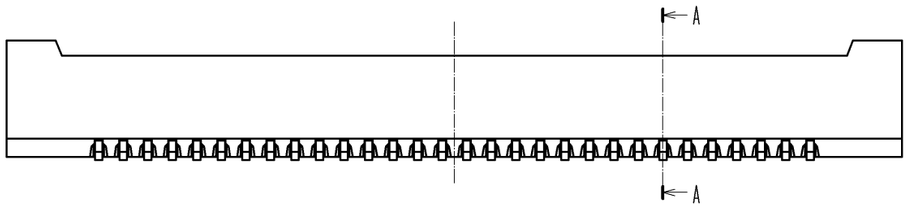

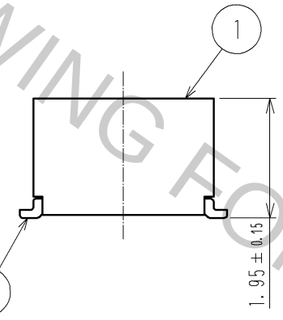

NOTES) 1. ALL LEADS CO-PLANARITY SHALL BE 0.1 MAX.
2. ▨ IS NO PATTERN AREA OTHER THAN THE SAME CIRCUIT.
3. HRS MARK AND CAV NO. IS INDICATED IN APPROXIMAL POSITION SHOWN.
4. GATE POSITION OF 60 TO 100 POSITIONS IS POSITIONED IN APPROXIMAL AREA SHOWN.
5. GATE POSITION OF 10 TO 50 POSITIONS IS POSITIONED IN APPROXIMAL AREA SHOWN. A PART OF THE WALL COULD BE NOTCHED FOR SETTING GATE.
6. 60 TO 100 POSITIONS HAVE CONCAVE PORTION.

製品名	製品コード	B	C	D
DF40C(2.0)-20DS-0.4V(70)	—	6.6	3.6	1.0
DF40C(2.0)-24DS-0.4V(70)	—	7.4	4.4	1.2
DF40C(2.0)-30DS-0.4V(70)	—	8.6	5.6	1.5
DF40C(2.0)-40DS-0.4V(70)	CL684-4042-5-70	10.6	7.6	3.2
DF40C(2.0)-44DS-0.4V(70)	CL684-4134-1-70	11.4	8.4	3.2
DF40C(2.0)-50DS-0.4V(70)	CL684-4091-0-70	12.6	9.6	3.2
DF40C(2.0)-60DS-0.4V(70)	CL684-4034-7-70	14.6	11.6	3.2
DF40C(2.0)-70DS-0.4V(70)	—	16.6	13.6	3.2
DF40C(2.0)-80DS-0.4V(70)	—	18.6	15.6	3.2
DF40C(2.0)-90DS-0.4V(70)	—	20.6	17.6	3.2
DF40C(2.0)-100DS-0.4V(70)	—	22.6	19.6	3.2

A-A (20:1)

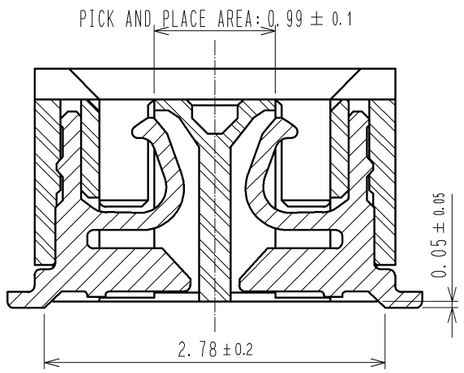

ENGAGEMENT FIGURE(20:1)

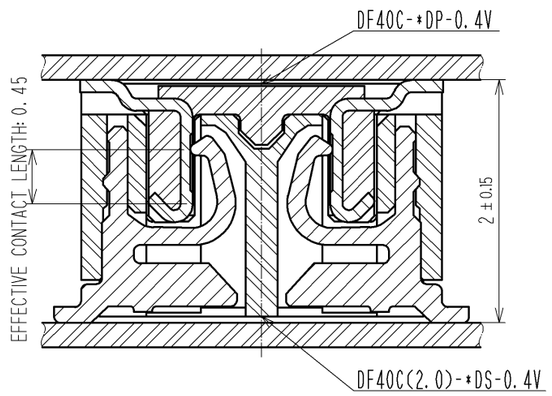

NO.	MATERIAL	FINISH , REMARKS	NO.	MATERIAL	FINISH , REMARKS
2	PHOSPHOR BRONZE	CONTACT AREA:GOLD 0.05μm MIN SMT LEAD:GOLD 0.05μm MIN UNDERPLATING:NICKEL 1μm MIN	5	PS	BLACK
			4	POLYESTER	CLEAR, COVER TAPE
1	LCP	BLACK, UL94V-0	3	PS	CLEAR, EMBOSSED CARRIER TAPE

UNITS	SCALE	COUNT	DESCRIPTION OF REVISIONS	DESIGNED	CHECKED	DATE
mm	10 : 1	△				

HRS HIROSE ELECTRIC CO., LTD.

APPROVED	: TS. MIYAZAKI	10. 06. 15	DRAWING NO.	EDC3-315166-03
CHECKED	: AR. TAKAHASHI	10. 06. 15	PART NO.	DF40C(2.0)-*DS-0.4V(70)
DESIGNED	: TK. SUZUKI	10. 06. 15	CODE NO.	CL684
DRAWN	: TK. SUZUKI	10. 06. 15		△ 1/2

HRS DRAWING FOR REFERENCE ONLY

Apr.1.2017 Copyright 2017 HIROSE ELECTRIC CO., LTD. All Rights Reserved.

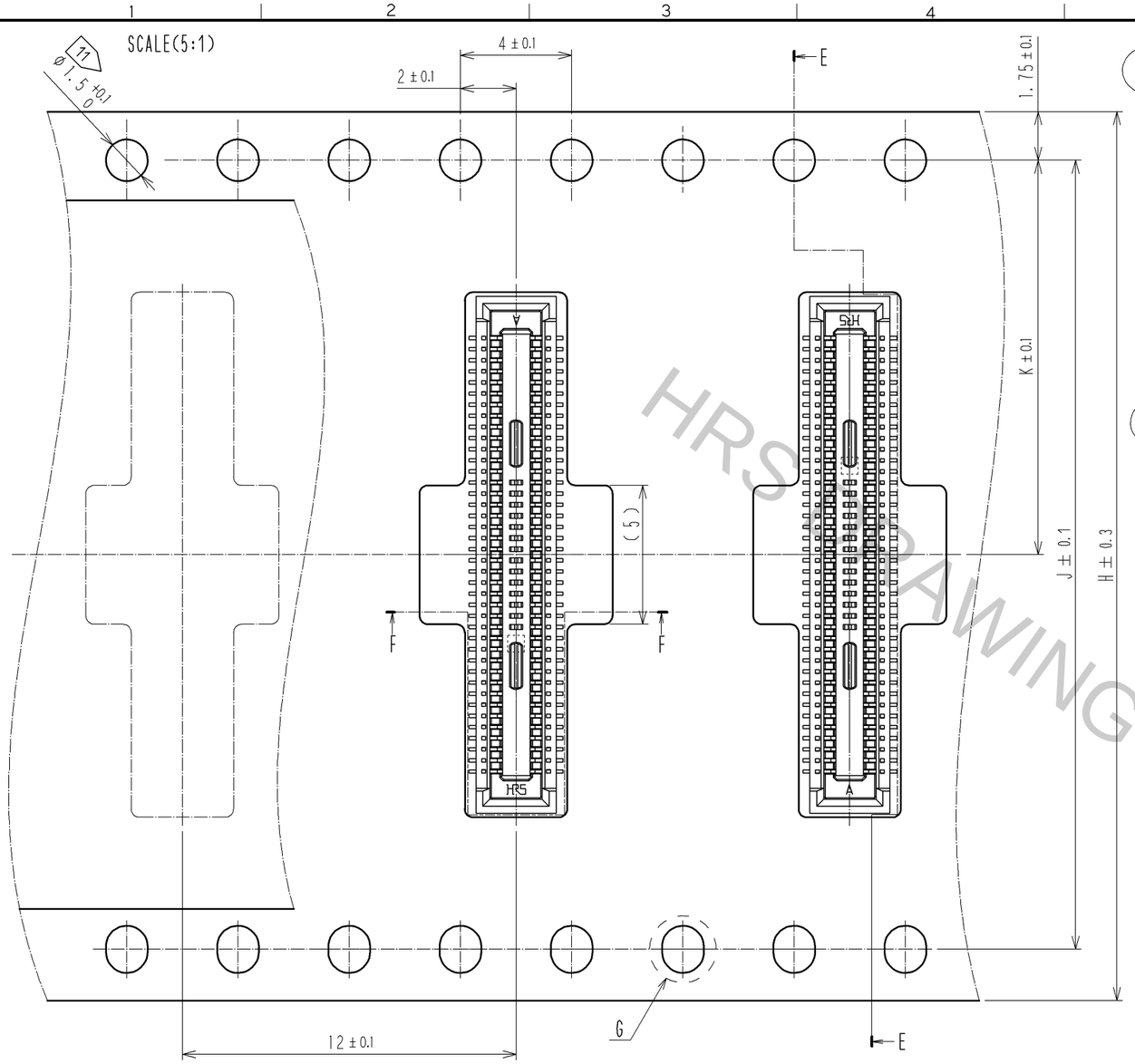

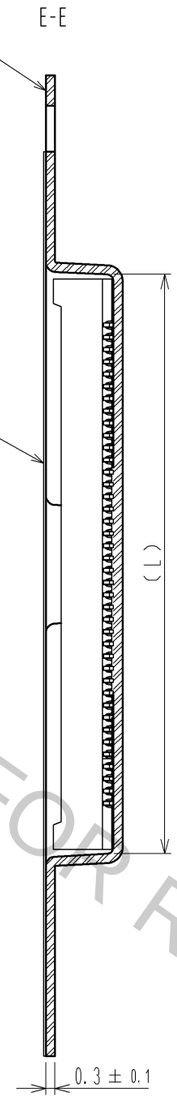

STYLE AND DIMENSION OF REEL(FREE SIZE)

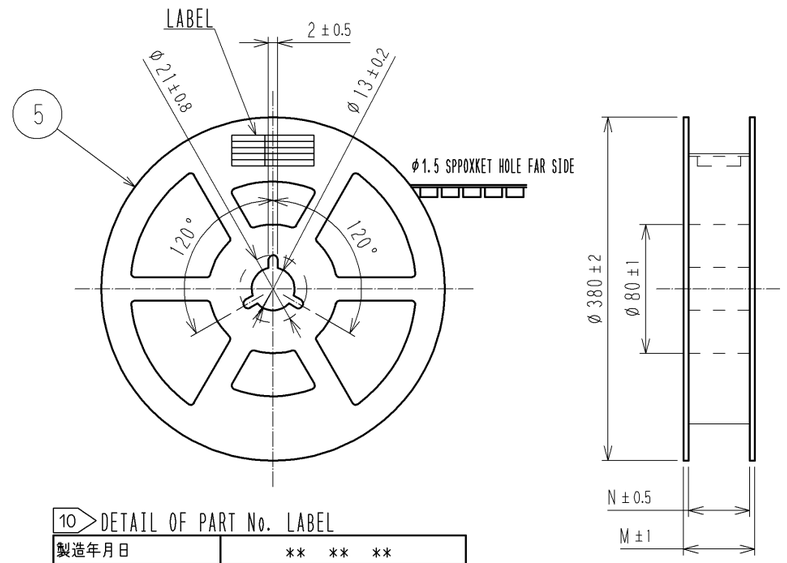

10 DETAIL OF PART No. LABEL

製造年月日	** ** **
製品コード	** ** **
製品名	DF40C(2.0)-*DS-0.4V(70)
数量	3000
納入者	ヒロセ電機(株)

製品名	H	J	K	L	M	N
DF40C(2.0)-20DS-0.4V(70)	16	—	7.5	6.9	21.5	17.5
DF40C(2.0)-24DS-0.4V(70)	16	—	7.5	7.7	21.5	17.5
DF40C(2.0)-30DS-0.4V(70)	24	—	11.5	8.9	29.5	25.5
DF40C(2.0)-40DS-0.4V(70)	24	—	11.5	10.9	29.5	25.5
DF40C(2.0)-44DS-0.4V(70)	24	—	11.5	11.7	29.5	25.5
DF40C(2.0)-50DS-0.4V(70)	24	—	11.5	12.9	29.5	25.5
DF40C(2.0)-60DS-0.4V(70)	24	—	11.5	14.9	29.5	25.5
DF40C(2.0)-70DS-0.4V(70)	32	28.4	14.2	16.9	37.5	33.5
DF40C(2.0)-80DS-0.4V(70)	32	28.4	14.2	18.9	37.5	33.5
DF40C(2.0)-90DS-0.4V(70)	44	40.4	20.2	20.9	49.5	45.5
DF40C(2.0)-100DS-0.4V(70)	44	40.4	20.2	22.9	49.5	45.5

DIRECTION OF UNREELING

F-F

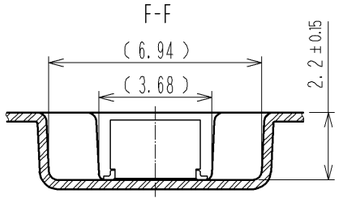

G (10:1)

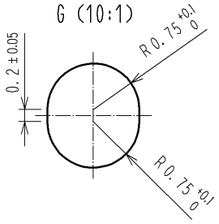

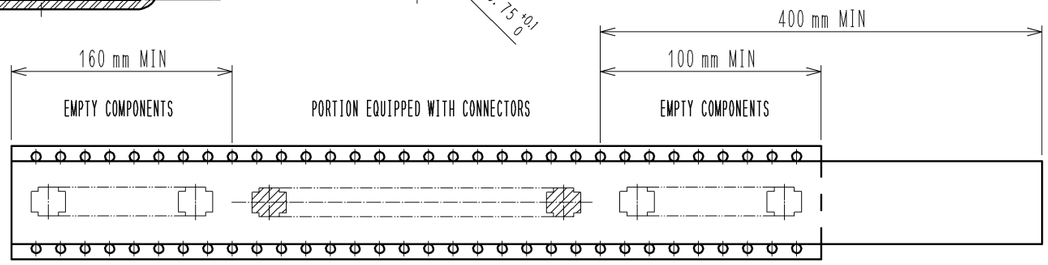

NOTES 7. PER REEL 3000 CONNECTORS.
8. THE DIMENSIONS IN PARENTHESES ARE FOR REFERENCE.
9 REFER TO JIS C 0806(PACKING OF COMPONENTS FOR AUTOMATIC HANDLING)
10 DETAIL OF PART NO. LABEL IS WRITTEN IN JAPANESE.
PART NO. LABEL DESCRIBS THE FOLLOWING INFORMATION FROM TOP.
PRODUCTION DATE:
PRODUCT CODE: CL684-****-*-70
PART NUMBER: DF40C(2.0)-*DS-0.4V(70)
NUMBER OF PIECES: 3000 PIECES
SUPPLIER NAME: HIROSE ELECTRIC CO., LTD.
11 10 TO 60 POSITIONS EMBOSSED CARRIER TAPE HAS
THE SPROCKET HOLE ON ONE SIDES.

HRS DRAWING FOR REFERENCE

HRS

図番:	EDC3-315166-03
製品名:	DF40C(2.0)-*DS-0.4V(70)
製品コード	CL684

△ 2/2