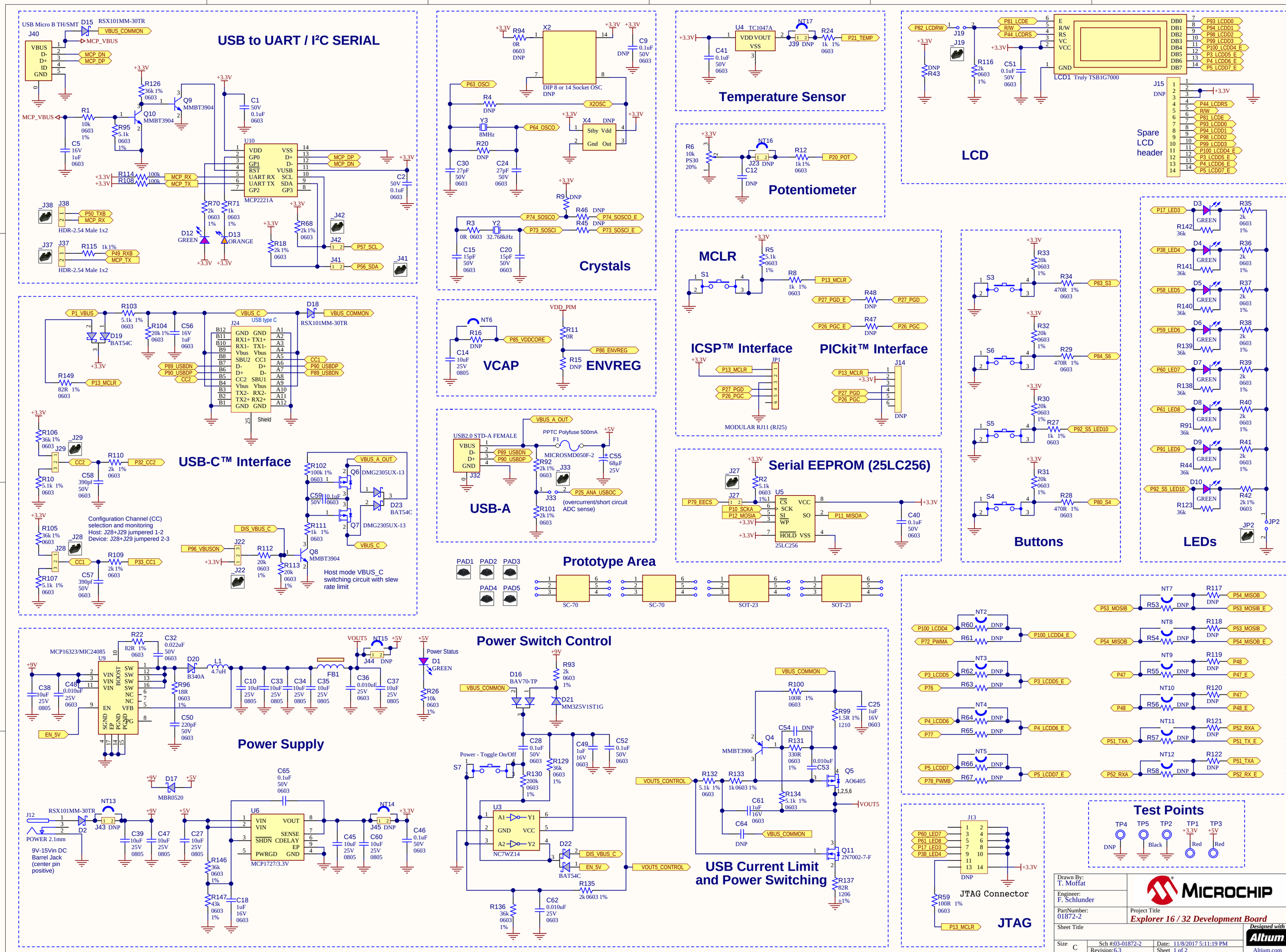
USB to UART / I²C SERIAL
USB Micro B TH/SMT
J40
D15 RSX101MM-30TR
VBUS_COMMON
MCP_VBUS
MCP_DN
MCP_DP
R126 36k 1% 0603
Q9 MMBT3904
Q10 MMBT3904
R1 10k 0603 1%
R95 5.1k 0603 1%
C5 16V 1uF 0603
C1 50V 0.1uF 0603
U10
MCP2221A
VDD VSS GP0 GP1 RST UART RX UART TX GP2 D+ D- VUSB SCL SDA GP3
R114 100k
R108 100k
MCP_RX
MCP_TX
C2 50V 0.1uF 0603
J38
P50_TXB
P49_RXB
HDR-2.54 Male 1x2
J37
R115 1k 1%
R70 2k 0603 1%
R71 1k 0603 1%
D12 GREEN
D13 ORANGE
R68 2k 1% 0603
R18 2k 1% 0603
J42
P57_SCL
J41
P56_SDA
Crystals
R94 0R 0603 DNP
X2
DIP 8 or 14 Socket OSC DNP
C9 0.1uF 50V 0603 DNP
P63_OSCI
X2OSC
R4 DNP
Y3 8MHz
P64_OSCO
X4 DNP
Stby Vdd Gnd Out
R20 DNP
C30 27pF 50V 0603
C24 27pF 50V 0603
R9 DNP
R46 DNP
R45 DNP
P74_SOSCO
P74_SOSCO_E
P73_SOSCI
P73_SOSCI_E
R3 0R 0603
Y2 32.768kHz
C15 15pF 50V 0603
C20 15pF 50V 0603
Temperature Sensor
U4 TC1047A
VDD VOUT VSS
NT17
J39 DNP
R24 1k 1% 0603
P21_TEMP
C41 0.1uF 50V 0603
Potentiometer
R6 10k PS30 20%
NT16
J23 DNP
R12 1k 1% 0603
P20_POT
C12 DNP
LCD
P82_LCDRW
J19
R43 DNP
R116 2k 0603 1%
C51 0.1uF 50V 0603
P81_LCDE
R/W
P44_LCDRS
E R/W RS VC VCC GND
DB0 DB1 DB2 DB3 DB4 DB5 DB6 DB7
LCD1 Truly TSB1G7000
P93_LCDD0
P94_LCDD1
P98_LCDD2
P99_LCDD3
P100_LCDD4_E
P3_LCDD5_E
P4_LCDD6_E
P5_LCDD7_E
J15 DNP
Spare LCD header
P44_LCDRS
R/W
P81_LCDE
P93_LCDD0
P94_LCDD1
P98_LCDD2
P99_LCDD3
P100_LCDD4_E
P3_LCDD5_E
P4_LCDD6_E
P5_LCDD7_E
MCLR
S1
R5 5.1k 0603 1%
R8 1k 1% 0603
P13_MCLR
P27_PGD_E
P27_PGD
R48 DNP
P26_PGC_E
P26_PGC
R47 DNP
ICSP™ Interface
JP1
MODULAR RJ11 (RJ25)
PICkit™ Interface
J14
DNP
Serial EEPROM (25LC256)
J27
R2 5.1k 0603 1%
U5
25LC256
CS SCK SI WP HOLD VSS VCC SO
P79_EECS
P10_SCKA
P12_MOSIA
P11_MISOA
C40 0.1uF 50V 0603
Buttons
S3 R33 20k 0603 1%
R34 470R 1% 0603
P83_S3
S6 R32 20k 0603 1%
R29 470R 1% 0603
P84_S6
S5 R30 20k 0603 1%
R27 1k 1% 0603
P92_S5_LED10
S4 R31 20k 0603 1%
R28 470R 1% 0603
P80_S4
LEDs
P17_LED3 D3 R35 2k 0603 1% R142 36k
P38_LED4 D4 R36 2k 0603 1% R141 36k
P58_LED5 D5 R37 2k 0603 1% R140 36k
P59_LED6 D6 R38 2k 0603 1% R139 36k
P60_LED7 D7 R39 2k 0603 1% R138 36k
P61_LED8 D8 R40 2k 0603 1% R91 36k
P91_LED9 D9 R41 2k 0603 1% R44 36k
P92_S5_LED10 D10 R42 2k 1% 0603 R123 36k
GREEN
JP2
USB-C™ Interface
P1_VBUS
R103 5.1k 1% 0603
R104 20k 1% 0603
C56 16V 1uF 0603
D19 BAT54C
R149 82R 1% 0603
P13_MCLR
VBUS_C
J24 USB type C
D18 RSX101MM-30TR
VBUS_COMMON
P89_USBDN
P90_USBDP
CC2
CC1
Shield
R106 36k 1% 0603
J29
R110 2k 1% 0603
P32_CC2
R10 5.1k 1% 0603
C58 390pf 50V 0603
R105 36k 1% 0603
J28
R109 2k 1% 0603
P33_CC1
R107 5.1k 1% 0603
C57 390pf 50V 0603
Configuration Channel (CC) selection and monitoring
Host: J28+J29 jumpered 1-2
Device: J28+J29 jumpered 2-3
R102 100k 1% 0603
Q6 DMG2305UX-13
C59 10uF 50V 0603
D23 BAT54C
R111 1k 1% 0603
Q7 DMG2305UX-13
DIS_VBUS_C
P96_VBUSON
J22
R112 20k 0603 1%
R113 20k 0603 1%
Q8 MMBT3904
Host mode VBUS_C switching circuit with slew rate limit
VBUS_A_OUT
USB-A
USB2.0 STD-A FEMALE
VBUS D- D+ GND
J32
PPTC Polyfuse 500mA
F1
MICROSMD050F-2
+5V
C55 68µF 25V
R92 2k 1% 0603
J33
P25_ANA_USBOC
(overcurrent/short circuit ADC sense)
R101 2k 1% 0603
Prototype Area
PAD1 PAD2 PAD3 PAD4 PAD5
SC-70
SOT-23
VCAP
NT6
R16 DNP
P85_VDDCORE
C14 10uF 25V 0805
ENVREG
VDD_PIM
R11 0R
P86_ENVREG
R15 DNP
Power Supply
MCP16323/MIC24085
U9
VIN VIN VIN EN SGND EP PGND PGND BOOST SW SW SW SW NC NC VFB FG
R22 82R 1% 0603
C32 0.022uF 50V 0603
D20 B340A
L1 4.7uH
R96 18R 0603 1%
C50 220pF 50V 0603
C38 10uF 25V 0805
C48 0.010uF 25V 0603
EN_5V
C10 10uF 25V 0805
C33 10uF 25V 0805
C34 10uF 25V 0805
C35 10uF 25V 0805
FB1
VOUT5
NT15
J44 DNP
C36 0.010uF 25V 0603
C37 10uF 25V 0805
Power Status
D1 GREEN
R26 10k 0603 1%
Power Switch Control
D16 BAV70-TP
VBUS_COMMON
R93 2k 0603 1%
D21 MM3Z5V1ST1G
C28 0.1uF 50V 0603
C49 1uF 16V 0603
C52 0.1uF 50V 0603
Power - Toggle On/Off
S7
R129 36k 0603 1%
R130 200k 0603 1%
U3
A1 Y1 GND VCC A2 Y2
NC7WZ14
D22 BAT54C
DIS_VBUS_C
EN_5V
VOUT5_CONTROL
R135 2k 0603 1%
R136 36k 0603 1%
C62 0.010uF 25V 0603
USB Current Limit and Power Switching
R100 100R 1% 0603
R99 1.5R 1% 1210
C25 1uF 16V 0603
C54 DNP
R131 330R 0603 1%
Q4 MMBT3906
C53 0.010uF
Q5 AO6405
R132 5.1k 1% 0603
R133 1k 0603 1%
R134 5.1k 1% 0603
C61 1uF 16V 0603
C64 DNP
VOUT5
Q11 2N7002-7-F
R137 82R 1206 ±1%
NT2 R60 DNP R61 DNP P100_LCDD4 P72_PWMA P100_LCDD4_E
NT3 R62 DNP R63 DNP P3_LCDD5 P76 P3_LCDD5_E
NT4 R64 DNP R65 DNP P4_LCDD6 P77 P4_LCDD6_E
NT5 R66 DNP R67 DNP P5_LCDD7 P78_PWMB P5_LCDD7_E
NT7 R53 DNP R117 DNP P53_MOSIB P53_MOSIB_E P54_MISOB
NT8 R54 DNP R118 DNP P54_MISOB P54_MISOB_E P53_MOSIB
NT9 R55 DNP R119 DNP P47 P47_E P48
NT10 R56 DNP R120 DNP P48 P48_E P47
NT11 R57 DNP R121 DNP P51_TXA P51_TX_E P52_RXA
NT12 R58 DNP R122 DNP P52_RXA P52_RX_E P51_TXA
Test Points
TP4 TP5 TP2 TP1 TP3
DNP Black +3.3V Red +5V Red
JTAG
J13
P60_LED7 P61_LED8 P17_LED3 P38_LED4
R59 100R 1% 0603
P13_MCLR
JTAG Connector
Drawn By: T. Moffat
Engineer: F. Schlunder
PartNumber: 01872-2
Project Title: Explorer 16 / 32 Development Board
Sheet Title
Size C
Sch #:03-01872-2
Revision:6.3
Date: 11/8/2017 5:11:19 PM
Sheet 1 of 2
File: 03-01872_Rev_6.3_Sheet_1.SchDoc
MICROCHIP
Designed with Altium
Altium.com

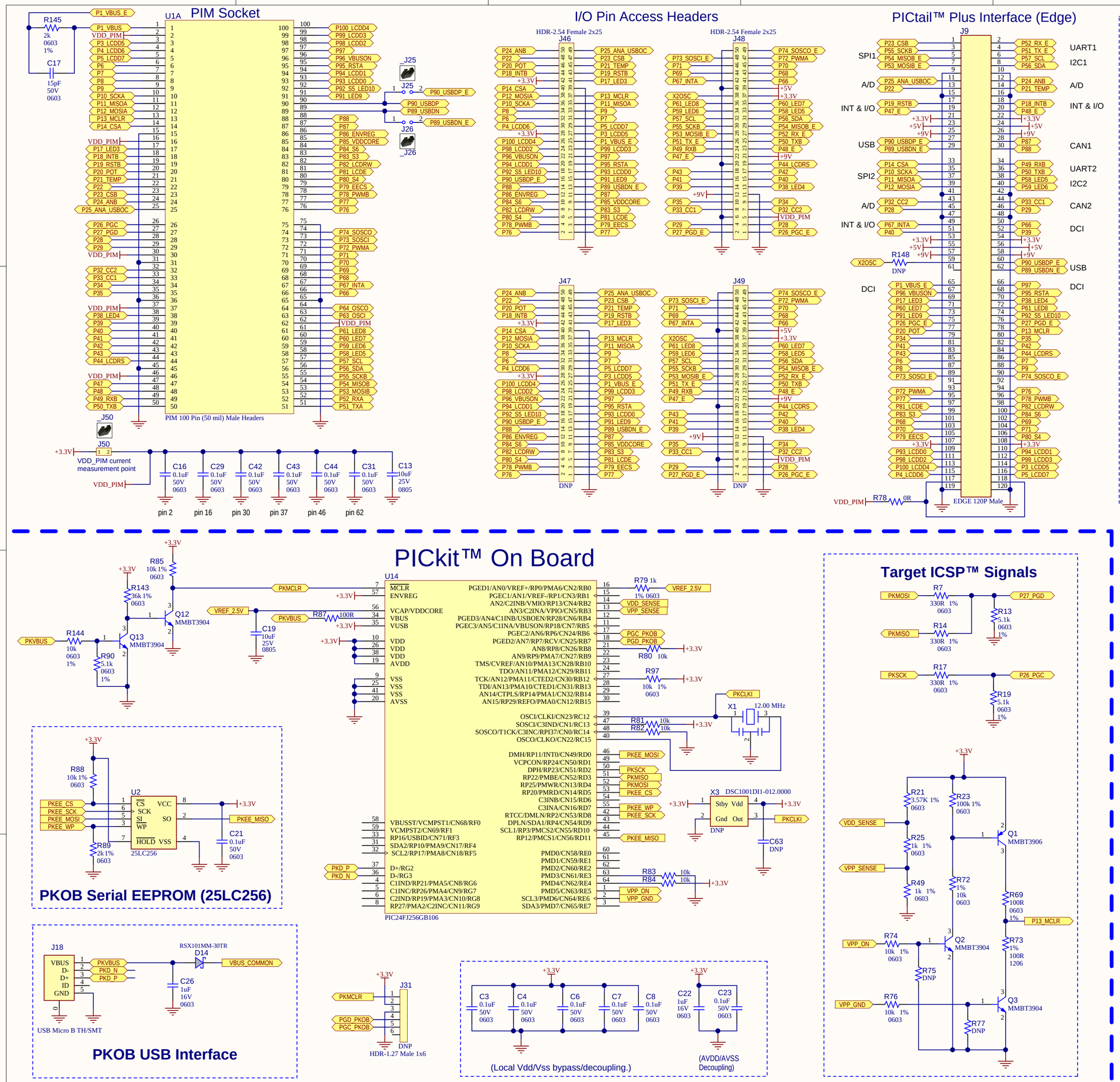

Pin #	Primary Function (mikroe)	Secondary Function (Microchip)	Pin #	Primary Function (mikroe)	Secondary Function (Microchip)
1	AN		16	PWM	SQ2
2	RST	SQ3	15	INT	CTS
3	CS	RTS	14	RX	
4	SCK		13	TX	
5	MISO	SQ1	12	SCL	
6	MOSI	SQ0	11	SDA	
7	+3.3V		10	+5V	
8	GND		9	GND	

Revision History

Date	Description
7/28/2016	Original release of Rev 6.3 schematic design.
11/8/2017	Updated suggested mikroBUS secondary (Microchip) function mapping table signal SQ3 location. Some schematic cosmetic changes, but no electrical or functional changes.

Drawn By:	T. Moffat
Engineer:	F. Schlunder
PartNumber:	01872-2
Project Title	*Explorer 16 / 32 Development Board*
Sheet Title	
Size	C
Sch #:	03-01872-2
Revision:	6.3
Date:	11/8/2017 5:11:20 PM
Sheet	2 of 2
File:	03-01872_Rev_6.3_Sheet_2.SchDoc

MICROCHIP

Designed with Altium — Altium.com