DRAWING MADE IN THIRD ANGLE PROJECTION

566413 ⇔ 566413

PART NUMBER	REV	FIRST USED	MACHINE REFERENCE	FEED TYPE
566413–1	F	356462–2	G–SPLICE TERM	AIR FEED
566413–2	G	2161300–1	5K CE & GI THRU SPLICE	AIR FEED
7–566413–7	F	356462–2	SPARE PARTS KIT	–
7–566413–8	G	–	CONV. KIT FOR –1 TO –2	–

TERMINAL NAME: SPLICE

62759

CRIMPING DATA

PAD NO.	CRIMP HEIGHT	WIRE SIZE	WIRE SET UP
3	054 ±.002 [1.37 ±0.05mm]	1200–1600 CMA	***
3	048 ±.002 [1.27 ±0.05mm]	800–1200 CMA	**
3	046 ±.002 [1.17 ±0.05mm]	400–800 CMA	**

CRIMP	SIZE	TYPE	RANGE
WIRE	.070 [1.78mm]	F	400–1600 CMA
INSUL	–	–	–

WIRE STRIP LENGTH	TERM APPL SPEC	FEED	APPL INSTRUCTION	SET UP GAGE	LAYOUT
.145–.185	114–2088	.330	408–8318(–1) 408–127000(–2)	–	L2568

TERMINAL NAME: SPLICE

62194–2
62194–4
62194–5

CRIMPING DATA

PAD NO.	CRIMP HEIGHT	WIRE SIZE	WIRE SET UP
3	052 ±.002 [1.32 ±0.05mm]	1200–1300 CMA	*
2	048 ±.002 [1.22 ±0.05mm]	800–1100 CMA	*
2	044 ±.002 [1.12 ±0.05mm]	300–700 CMA	*

CRIMP	SIZE	TYPE	RANGE
WIRE	.070 [1.78mm]	F	300–1300 CMA
INSUL	–	–	–

WIRE STRIP LENGTH	TERM APPL SPEC	FEED	APPL INSTRUCTION	SET UP GAGE	LAYOUT
–	114–2006	.330	408–8318(–1) 408–127000(–2)	–	L2568

** RECOMMENDED SET UP WIRE FOR TERMINAL 62759.
FOR APPLICATOR QUALIFICATION ONLY.

WIRE COMBINATION DATA

REF PAD LTR	REF CRIMP HEIGHT	WIRE COMBINATION
3	.054	***
3	.050	(1)22 AWG + (1)24 AWG
3	.046	(2)26 AWG

*** NOT RECOMMENDED.

* RECOMMENDED SET UP WIRE FOR TERMINAL 62194.
FOR APPLICATOR QUALIFICATION ONLY.

WIRE COMBINATION DATA

REF PAD LTR	REF CRIMP HEIGHT	WIRE COMBINATION
3	.052	(1)26 MAG + (1)20 AWG
2	.048	(1)22 MAG + (1)26 AWG
2	.044	(1)26 MAG + (1)26 AWG

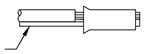

SOLID WIRE ON BOTTOM

2	–	2	–	18029–2	M4 HEX NUT	128
2	–	2	–	18025–2	M4 LOCK WASHER	127
2	–	2	–	18027–2	M4 FLAT WASHER	126
1	–	1	–	408–32162	THRU SPLICE IS SHEET–GII	125
–	–	1	1	217238–1	GENERAL INSTRUCTION PACKAGE	124
–	–	–	1	408–8318	THRU SPLICE IS SHEET	123
–	–	1	–	408–127000	THRU SPLICE IS SHEET	122
–	–	1	1	4–21028–0	PIN,SLT SPR(Ø.093x.75)ST GDE PL	121
						120
						119
–	–	2	2	21055–7	SPACER, WASHER	118
–	–	3	3	21024–5	WASHER, LOCK(#10)ADJ BLOCK	117
						116
						115
–	–	2	2	21024–2	WASHER,LOCK(#4)FRONT STP GUIDE	114
						113
–	–	2	2	21024–3	WASHER,LOCK(#6)STRIPPER	112
–	–	2	2	21024–4	WASHER,LOCK(#8)STRIPPER	111
–	–	AR	AR	21899–2	WASHER, FLAT (#10)	110
						109
2	–	2	–	3–18023–3	SCR,SHC (M6 X 50)	108
–	–	–	2	3–18023–0	SCR,SHC(M6X 25)RAM	107
						106
						105
–	–	1	1	819347–1	PLATE, ID – RAM	104
–	–	1	1	690701–2	ID PLATE, STRIP GUIDE	103
						102
–	–	AR	AR	982057–2	TAPE, POLYURETHANE FOAM	101
						100
–	–	2	2	3–21002–0	SCR,BHC(10–32x.88)DRAG	99
–	–	1	1	22733–8	SCR,BHC(8–32x.38 LW)ANVIL	98
–	–	–	–	–	–	97
–	–	2	2	2–22733–8	SCR,BHC(1/4–20x.62)FEED	96
–	–	1	1	2–21002–7	SCR,BHC(10–32x.50)SG ADJ BLK	95
–	–	4	4	2–21002–2	SCR,BHC(8–32x.50)TERM H DWN	94
						93
						92
						91
						90
						89
–	–	4	4	1–21002–0	SCR,BHC(2–56X.25)GUARD	88
–	–	2	2	2–21002–6	SCR,BHC(10–32x.38)	87
–	–	1	1	2–22603–1	SCR,HEX HD(8–32x.38)FEED FINGER	86
–	–	2	2	1–21000–3	SCR,SHC(4–40x.25)F ST GUIDE	85
–	–	1	1	2–21000–7	SCR,SHC(8–32x.50)STRIPPER	84
						83
–	–	2	2	3–21000–5	SCR,SHC(10–32x.38)GUARD	82
–	–	1	1	3–22603–1	SCR,HEX(10–32x.38)SG ADJ BL	81
–	–	1	1	3–21001–4	SCR, SHC(3/8–16x.88)	80
–	–	1	1	21024–8	LOC WASHER .38	79
–	–	1	1	1338118–1	MOUNT, STRIPPER	78
–	–	2	2	1–21000–9	SCR,SHC(6–32x.38)STRIPPER	77
–	–	–	1	1338175–1	GUARD	76
–	–	–	1	1338176–1	GUARD, EXTENSION	75
–	–	1	1	1338177–1	DEFLECTOR	74
–	–	2	2	21002–9	SCR, BHC 2–56 X .25 LG.	73
–	–	1	1	1338174–1	WINDOW, GUARD	72
–	–	1	1	1338116–1	BRACKET, FEED	71
–78	–77	–2	–1	PART NO	DESCRIPTION	ITEM NO

QTY REQD PER ASSY — PARTS LIST

2	–	2	–	1–18023–3	SCR, SHC, M4 X 16	70
1	–	1	–	2168489–1	ACTUATOR, SPARE MC1	69
1	–	1	–	2161461–1	GUARD, EXTENSION	68
1	–	1	–	2161460–1	GUARD	67
						66
–	–	1	1	461065–1	AIR FEED ASSY (1 INCH)	65
–	–	2	2	3–21000–7	SCR,SHC(10–32x.75)AIR ASSY	64
						63
						62
						61
–	–	1	1	692655–7	AIR FEED VALVE ASSY.	60
						59
						58
						57
–	–	1	1	2–694433–9	PAWL, FEED	56
						55
						54
–	–	1	1	1–461062–1	FEED FINGER ASSY	53
						52
						51
						50
						49
						48
						47
–	–	1	1	21004–9	SCR,SHC(.31 X .50)WHEEL ADJ	46
–	–	1	1	27058–2	BALL PLUNGER	45
–	–	1	1	1338117–1	TOOL HOLDER ASSEMBLY	44
–	–	1	1	1338124–1	WHEEL, ADJ	43
						42
–	–	1	1	7–21002–7	BOLT, CRIMPER(5/16x1.00)	41
–	–	2	2	2–18023–8	SCR,SHC (M6x20)BASEPLATE	40
						39
–	–	–	–	–	–	38
–	–	–	–	–	–	37
–	–	–	–	–	–	36
–	–	–	–	–	–	35
						34
–	–	1	1	1338397–1	PLATE, BASE	33
–	–	1	1	690432–3	SCREW, ADJUSTMENT	32
						31
–	–	1	1	455689–1	BLOCK, STRIP GUIDE ADJ	30
–	–	1	1	455671–1	PLATE, STRIP GUIDE	29
–	–	1	1	1–455888–5	SPACER, FRONT SHEAR DEP	28
–	–	2	2	1–22284–0	SPRING, DRAG	27
–	–	1	1	690546–1	LEVER, DRAG RELEASE	26
–	–	1	1	240792–1	DRAG, TERMINAL	25
–	–	1	1	1213396–2	GUIDE, STRIP (REAR)	24
–	–	1	1	690438–1	GUIDE, STRIP (FRONT)	23
–	–	1	1	1338200–6	SPACER, WIRE CRIMPER	22
						21
						20
–	–	1	1	1490862–1	STRIPPER	19
						18
						17
						16
						15
						14
						13
–	–	1	1	3–22280–3	SPRING, SHEAR	12
–	–	1	1	690461–1	STOP, SHEAR	11
–	–	1	1	690459–1	HOLDER, SHEAR (FRONT)	10
–	1	1	1	462006–1	SHEAR, FLOAT (FRONT)	9
–	1	1	1	6–683403–6	ANVIL	8
						7
						6
–	–	1	1	1338126–3	DEPRESSOR, SHEAR (FRONT)	5
–	–	1	1	1338200–3	SPACER, WIRE CRIMPER	4
–	–	1	1	1338200–2	SPACER, WIRE CRIMPER	3
–	–	1	1	1338200–1	SPACER, WIRE CRIMPER	2
–	1	1	1	1338125–7	CRIMPER, WIRE	1
–78	–77	–2	–1	PART NO	DESCRIPTION	ITEM NO

QTY REQD PER ASSY — PARTS LIST

REVISION OF EACH ASSY NO (WHEN BLANK, USE DWG REVISION)

P	F	LTR	REVISION RECORD	APP	DATE
		G	ECR–15–011404	RS	AUG15

DIMENSIONS IN INCHES.
DO NOT SCALE PRINT.
TOLERANCES UNLESS OTHERWISE SPECIFIED:
2 PLC DEC ±.25
3 PLC DEC ±–
4 PLC DEC ±–
ANGLES ±–
SURF TEXTURE: √
REMOVE BURRS, BREAK SHARP EDGES R.015 MAX

MATL – – | HT TR – – | FIN – –

DR B.HIGMAN 10–01 | APP 10–01 T.ELBIN
CHK 10–01 B.HIGMAN | REL – –

TE CONNECTIVITY Harrisburg, PA 17105–3608

NAME SIDE FEED THRU SPLICE APPLICATOR | MACHINE REF THRU–G

SCALE – | D | DWG NO 566413 | SHEET 1 OF 2 | REV G

CAGE CODE 00779 | CUSTOMER AND ASSEMBLY DRAWING | RESTRICTED TO

LOC A | DIST 66

AMP 1756 REV 3–92 Translated 070403,015206 (YYMMDD.HHMMSS) from ComputerVision, Inc., Medusa Revision 12.2.5T

THIS DRAWING IS A CONTROLLED DOCUMENT.
THIS DRAWING IS UNPUBLISHED– © COPYRIGHT 2000 BY AMP INCORPORATED. ALL RIGHTS RESERVED. RELEASED FOR PUBLICATION 21FEB2000

DRAWING MADE IN THIRD ANGLE PROJECTION

566413 ⇔ 566413

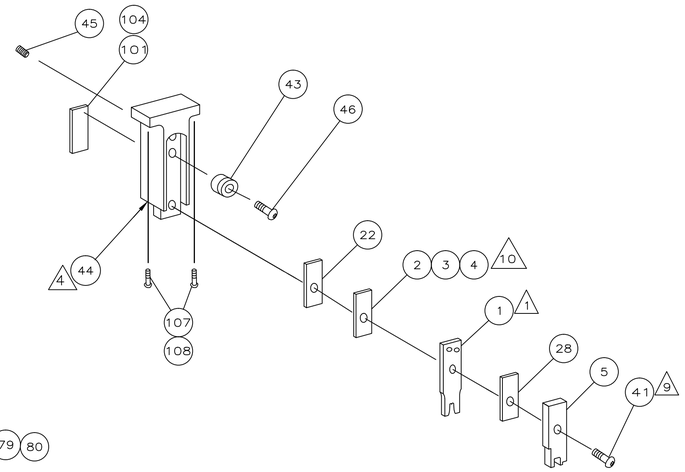

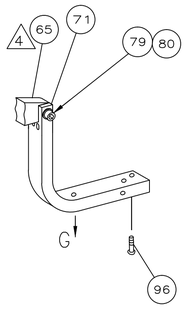

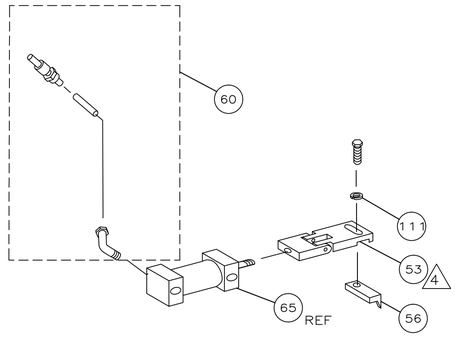

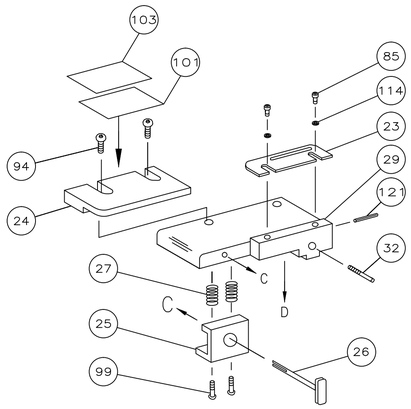

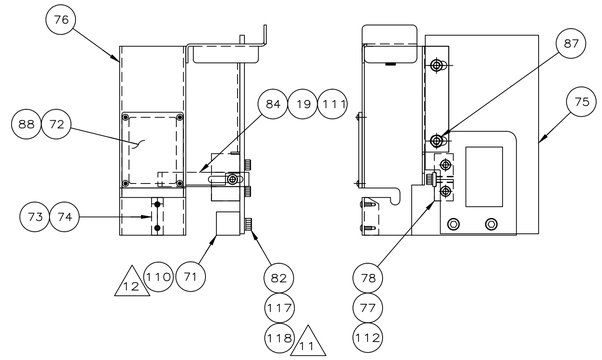

GUARD DETAIL
−1 ONLY

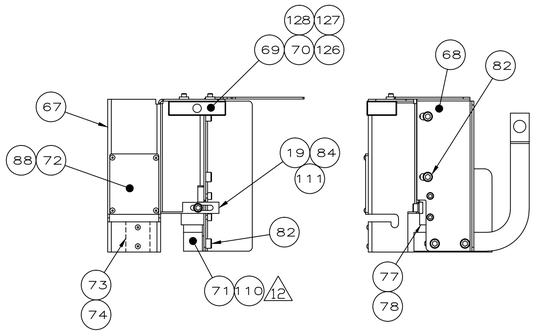

GUARD DETAIL
−2 ONLY

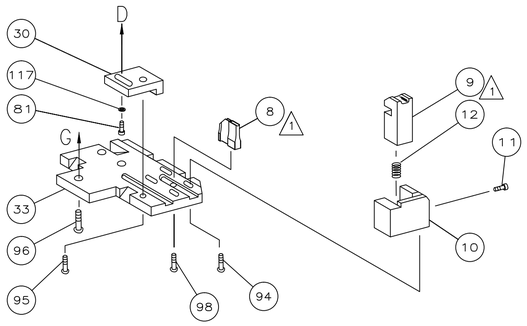

1. RECOMMENDED SPARE PARTS.
2. GREASE LIGHTLY.
3. GUARD MUST BE IN PLACE WHEN OPERATING APPLICATOR IN A BENCH MACHINE.
4. SEE DRAWING FOR COMPONENTS
5. ITEM NOT SHOWN
7. USE MANUAL PRECISION ADUSTMENT LEVER ON G TERMINATOR TO ACHIEVE PROPER CRIMP HEIGHT.
9. CRIMPER BOLT MUST BE LOOSENED TO CHANGE CRIMP HEIGHT ADJUSTING WHEEL. BE SURE TO SEAT THE CRIMPER AGAINST THE ADJUSTING WHEEL AND REALIGN THE TOOLING.
10. INSTALL ITEM 2,3 & 4 AS REQUIRED. SHIP REMAINING ITEMS WITH APPLICATOR.
11. USE ITEM # 118 TO SPACE ITEM # 75
12. PLACE ITEM 110 BETWEEN ITEM 71 AND 75 ON −1. PLACE ITEM 110 ETWEEN ITEM 71 AND 68 ON −2.

P	F	LTR	REVISION RECORD	APP	DATE

SEQ SHEET 1

DWG SIZE	PART NO	DESCRIPTION	ITEM NO
	← REVISION OF EACH ASSY NO (WHEN BLANK, USE DWG REVISION)		

QTY REQD PER ASSY — PARTS LIST

DIMENSIONS IN INCHES.
DO NOT SCALE PRINT.
TOLERANCES UNLESS OTHERWISE SPECIFIED:
2 PLC DEC ±.25
3 PLC DEC ±−
4 PLC DEC ±−
ANGLES ± −
SURF TEXTURE: √
REMOVE BURRS, BREAK SHARP EDGES R.015 MAX

MATL	– –	HT TR	– –
FIN	– –		
DR	12MAY03 R.O.WILSON	APP	12MAY03 T.ELBIN
CHK	12MAY03 R.O.WILSON	REL	– –

TE CONNECTIVITY
Harrisburg, PA 17105−3608

NAME: SIDE FEED THRU SPLICE APPLICATOR
MACHINE REF: THRU−G
SCALE: –
D
DWG NO: 566413
SHEET 2 OF 2
REV G

CAGE CODE 00779
CUSTOMER AND ASSEMBLY DRAWING
RESTRICTED TO

LOC A
DIST 66

AMP 1756 REV 3−92
Translated: 07-0403.015120 (YYMMDD.HHMMSS) from Computervision, Inc., Medusa Revision 12.2.5T

THIS DRAWING IS A CONTROLLED DOCUMENT.
THIS DRAWING IS UNPUBLISHED— RELEASED FOR PUBLICATION 21FEB.2000
© COPYRIGHT 2000 BY AMP INCORPORATED. ALL RIGHTS RESERVED.