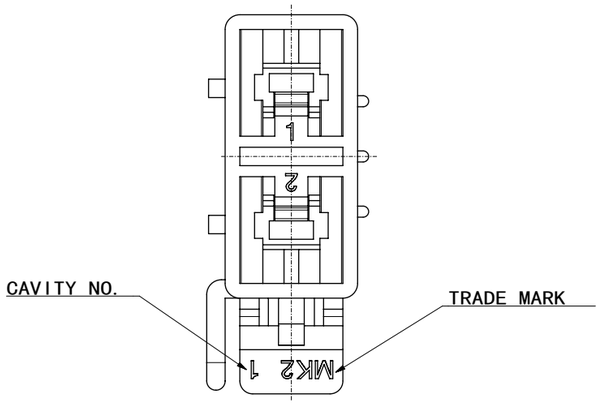

NOTE
1. MATERIAL & COLOR : SEE TABLE
2. MATED HOSUING : 35180-*60*
3. APPLICABLE TERMINAL : 35748-0*10
4. MATED TPA : 35965-029*
5. PRODUCT SPECIFICATION : PS 351800600
6. PACKAGING SPECIFICATION : PK-35965-001

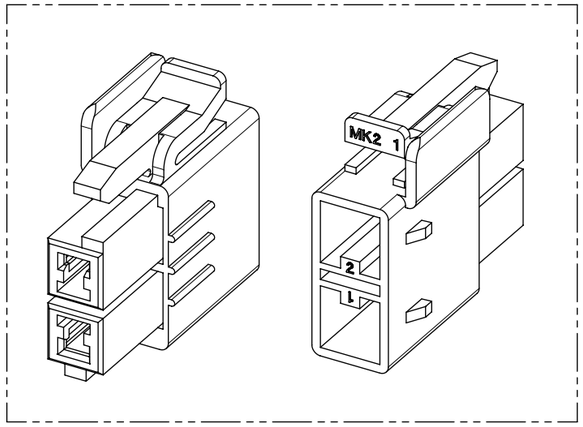

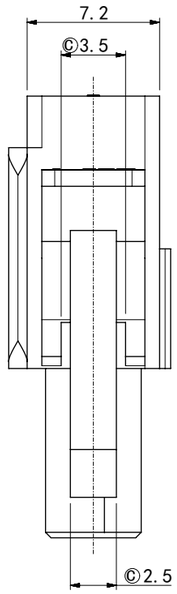

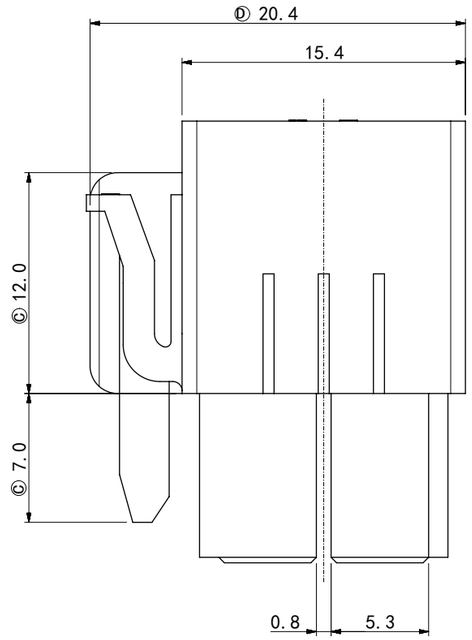

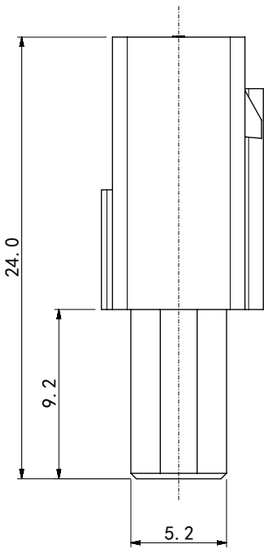

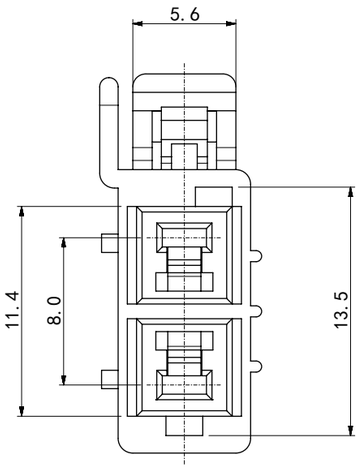

NO.	POLYESTER (PBT)		Ⓒ PET/PC (UL94V-0)	
	MATERIAL	COLOR	MATERIAL	COLOR
1	35965-0220	NATURAL	35965-9220	NATURAL
2	35965-0222	RED	35965-9222	RED
3	35965-0224	BLUE	35965-9223	YELLOW
4			35965-9224	BLUE

SYMBOLS	
Ⓐ = 0	
Ⓑ = 0	
Ⓒ = 0	
Ⓓ = 0	
▼ = 0	
Ⓔ = 0	
☒ = 0	
■ = 0	
Ⓕ = 0	

THIS DRAWING CONTAINS INFORMATION THAT IS PROPRIETARY TO MOLEX ELECTRONIC TECHNOLOGIES, LLC AND SHOULD NOT BE USED WITHOUT WRITTEN PERMISSION

DIMENSION UNITS	SCALE
mm	3:1

GENERAL TOLERANCES (UNLESS SPECIFIED)

ANGULAR TOL	±	1.0 °
4 PLACES	±	
3 PLACES	±	
2 PLACES	±	
1 PLACE	±	0.3
0 PLACES	±	0.3

DRAFT WHERE APPLICABLE MUST REMAIN WITHIN DIMENSIONS

CURRENT REV DESC:

EC NO: 177777
DRWN: JSSHIN 2018/06/08
CHK'D: SHCHU 2018/06/08
APPR: YSKIM02 2018/06/08

INITIAL REVISION:
DRWN: SCHONG03 2017/12/15
APPR: YSKIM02 2018/06/08

molex

.070 MULTI FEMALE HSG -2P (C-TYPE)

PRODUCT CUSTOMER DRAWING

DOCUMENT NUMBER	DOC TYPE	DOC PART	REVISION
359659220	PSD	000	E

THIRD ANGLE PROJECTION	DRAWING	SERIES	MATERIAL NUMBER	CUSTOMER	SHEET NUMBER
	A3-SIZE	35965	SEE TABLE	GENERAL MARKET	1 OF 1

DOCUMENT STATUS	P1	RELEASE DATE	2018/06/08 03:11:43

FORMAT: master-tb-prod-A3
REVISION: H
DATE: 2018/01/18