Alle Rechte vorbehalten/ *All rights reserved*

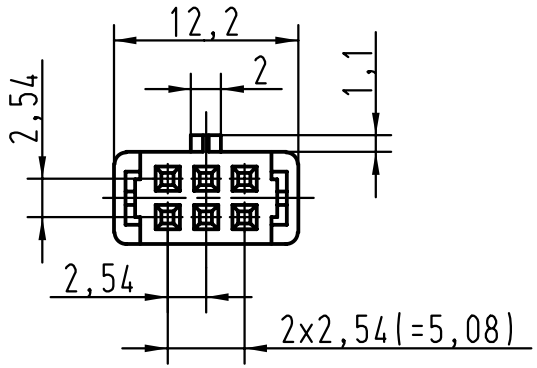

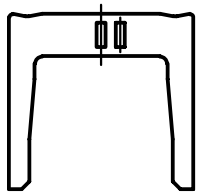

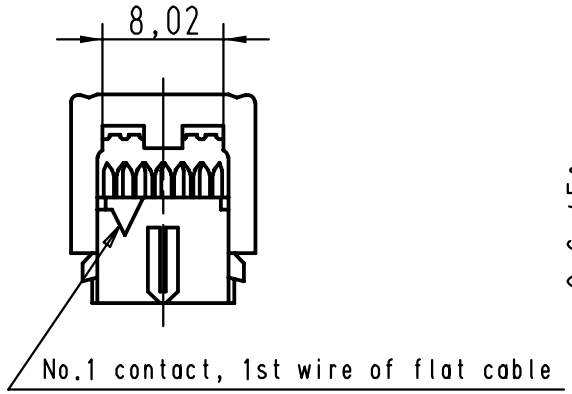

pre assembled

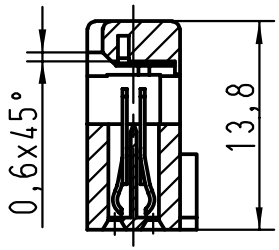

fitted

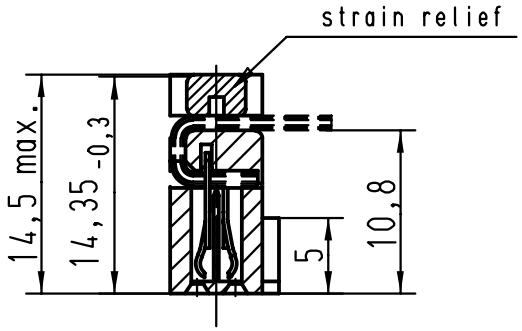

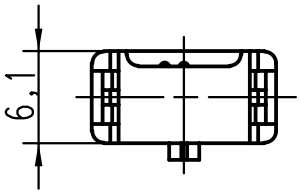

Part-No.	performence level		Mod.	Dat.	Name
09185065814	0,76 µm Au				
09185066814	2				
09185067814	3		29757	25-MAR-02	CV

	Dat.	Name
Detail.	25-MAR-02	CV
Insp.		
Stand.		

SEK 18 Female connector

6 poles with central polarisation, closed end cover and strain relief

2 : 1

0918506X814

Sub.

1