used for: D-SUB

No. of pos.	A $^{+0.2}$	B $^{+0.2}$	C	D $_{-0.25}$	PART NO.
9	21.1	39.4	$25.00^{+0.12}_{-0.13}$	16.46	4STD09SAM99B30X
15	21.1	47.7	$33.30^{+0.15}_{-0.1}$	24.79	4STD15SAM99B30X
25	21.1	61.4	47.04 ± 0.13	38.50	4STD25SAM99B30X
37	21.1	77.9	63.50 ± 0.13	54.96	4STD37SAM99B30X

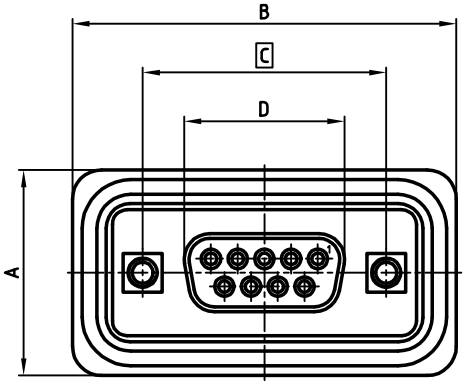

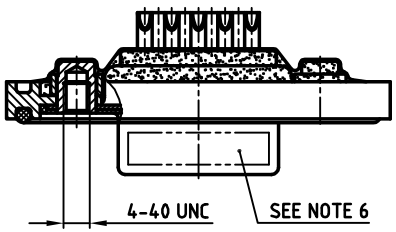

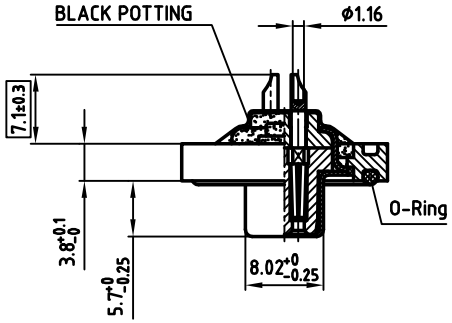

NOTES:

1. METALSHELLS: COPPER ALLOY; TIN PLATED
2. INSULATORS: PBT GF; UL 94 V-0; BLACK
3. CONTACTS: COPPER ALLOY
4. PLATING: HARD GOLD OVER NICKEL
5. MAXIMUM TORQUE VALUE FOR THREAD: 6" LBS
6. CONNECTOR IS PART MARKED: PART-NO. CONEC Y/WW
7. [ ] = CRITICAL DIMENSION: SPC

THIS DRAWING MAY NOT BE COPIED OR REPRODUCED IN ANY WAY, AND MAY NOT BE PASSED ON TO A THIRD PARTY WITHOUT WRITTEN PERMISSION. OWNERSHIP AND COPYRIGHT OF CONEC GmbH

DO NOT ALTER CAD DRAWING BY HAND

rev.	description	date	name

tolerance

1999	date	name
drawn	30.03.	Barcinski
appd.	30.03.	Mickenbecker
norm	DIN 41652	
d-old		

CONEC®

scale: 2:1
material: SEE NOTES

title:
D-SUB FEMALE
SOLDER CUP 9-37pos.
WITH THREADED INSERT WATERTIGHT

dwg no: CAD/ REL.14 DIN-A 3
18K2IA5A sh:2/2

product no: **SEE TABLE**