THIS DRAWING IS UNPUBLISHED. RELEASED FOR PUBLICATION 20
© COPYRIGHT 20 BY - ALL RIGHTS RESERVED.

REVISIONS

P	LTR	DESCRIPTION	DATE	DWN	APVD
	C3	REVISED PER ECO-16-013204	07SEP2016	DD	GK
	C4	REVISED PER ECO-16-018154	16DEC2016	DD	GK

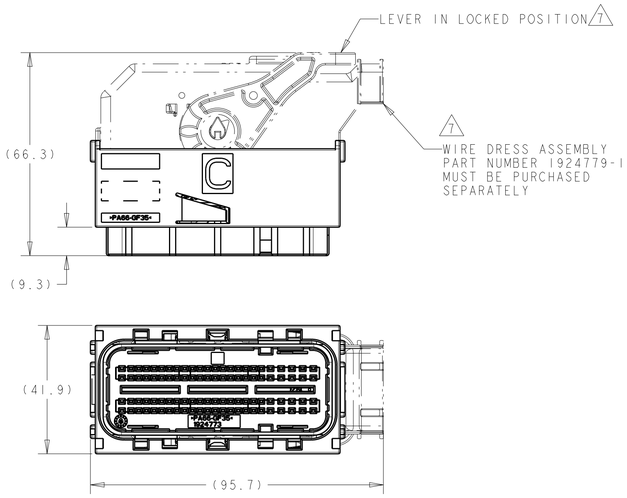

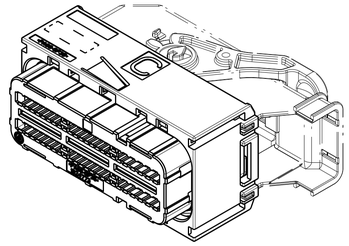

ISOMETRIC VIEW
SCALE 1:1

RIGHT EXIT PLUG ASSEMBLY SHOWN
WITH OPTIONAL
WIRE DRESS ASSEMBLY
(MUST BE PURCHASED SEPARATELY)
SCALE 1:1

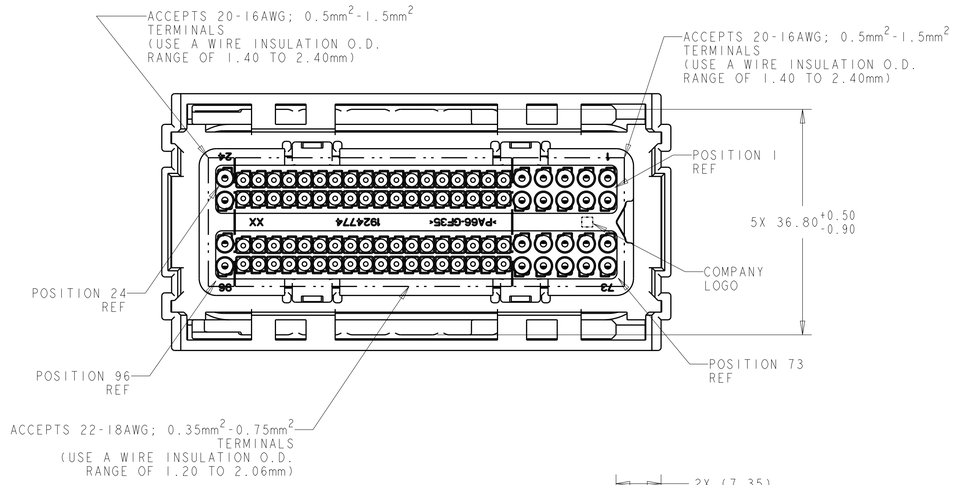

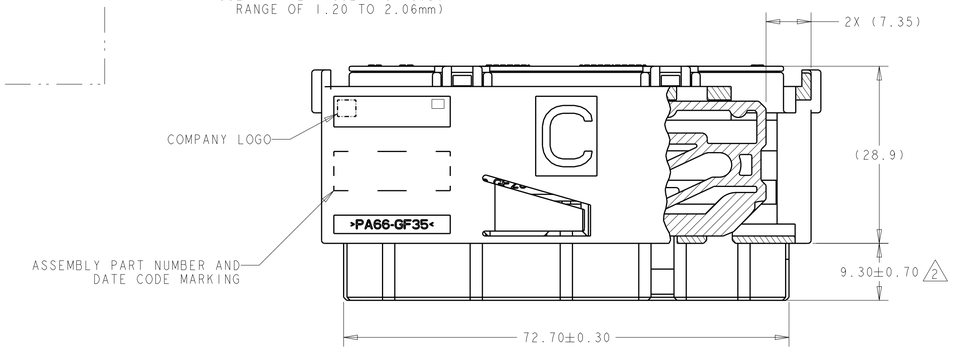

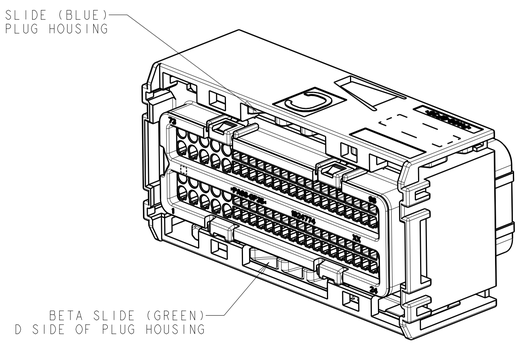

(METHOD FOR IDENTIFYING EXIT ORIENTATION)

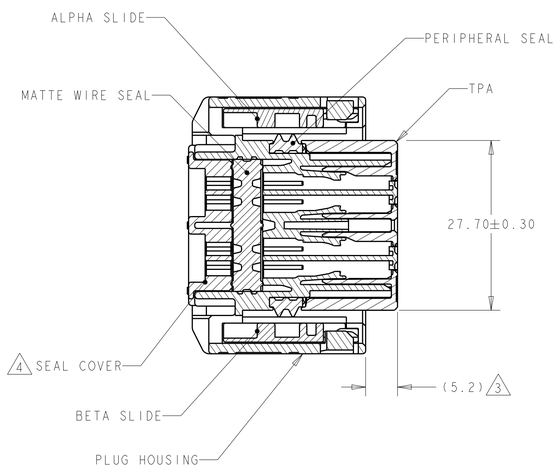

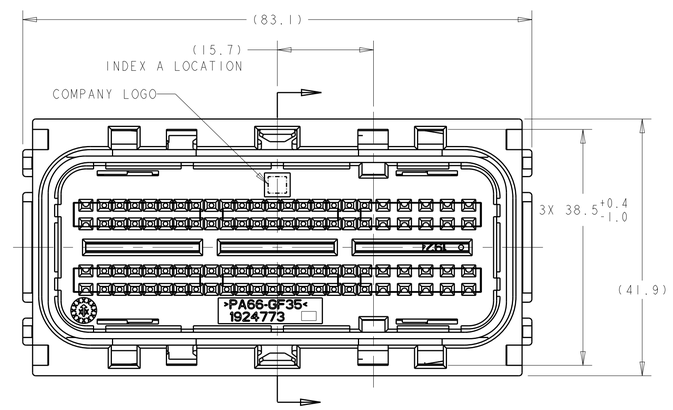

1. PLUG HOUSING AND SEAL COVER: NYLON 6/6, BLACK.
   TPA: NYLON 6/6, COLOR - SEE TABLE.
   MATTE WIRE SEAL: SILICONE, LIGHT BLUE.
   PERIPHERAL SEAL: SILICONE, GREEN.
   ALPHA SLIDE: NYLON 6/6, BLUE.
   BETA SLIDE: NYLON 6/6, GREEN.

2. TPA SHOWN IN PRE-LATCHED, AS SHIPPED, POSITION.

3. TPA SHOWN IN CLOSED POSITION.

4. SEE TABLE ON SHEET 2 AND 3 FOR SEAL COVER PIN OUT CONFIGURATION.

5. PLUG ASSEMBLY MATES WITH TE CONNECTIVITY INTERFACE DRAWING 1924771_INT, POLARIZATION A.

6. PLUG ASSEMBLY WILL ACCEPT THE FOLLOWING GET TERMINAL PART NUMBERS:
   1393364-1 (GOLD 22AWG; 0.35mm²)
   1393365-1 (GOLD 18-20AWG; 0.75mm²-0.5mm²)
   1924878-1 (TIN/SILVER 22AWG; 0.35mm²)
   1924879-1 (TIN/SILVER 18-20AWG; 0.75mm²-0.5mm²)
   1924782-1 (TIN/SILVER 1.0mm²)
   1924880-1 (TIN/SILVER 16AWG; 1.5mm²)

7. WIRE DRESS ASSEMBLY MUST BE INSTALLED ONTO PLUG ASSEMBLY WITH LEVER IN LOCKED POSITION.

8. APPLICATION SPEC'S: 408-10229, 408-10230

9. NOTE DELETED.

10. FORCE TO SEAT TPA COMPONENT FROM PRE-SET TO LOCKED (FULLY LOADED W/ TERMINALS) TO BE 83N MAX.

11. FORCE TO MOVE TPA FROM FULLY LOCKED TO PRE-SET TO BE 115N MAX. FLAT BLADE SCREWDRIVER SUGGESTED FOR REMOVAL OF TPA.

BLOCKED CIRCUITS	TPA COLOR	INDEX REF	PART NUMBER
ALL CLOSED	GRAY	A	9-1924939-9
SEE TABLE, SH 2	GRAY	A	6-1924939-4
SEE TABLE, SH 2	GRAY	A	6-1924939-3
SEE TABLE, SH 2	GRAY	A	6-1924939-2
SEE TABLE, SH 2	GRAY	A	6-1924939-1
SEE TABLE, SH 2	GRAY	A	6-1924939-0
SEE TABLE, SH 2	GRAY	A	5-1924939-9
SEE TABLE, SH 2	GRAY	A	5-1924939-8
SEE TABLE, SH 2	GRAY	A	5-1924939-7
SEE TABLE, SH 2	GRAY	A	5-1924939-6
SEE TABLE, SH 2	GRAY	A	5-1924939-5
SEE TABLE, SH 2	GRAY	A	5-1924939-4
SEE TABLE, SH 2	GRAY	A	5-1924939-3
SEE TABLE, SH 2	GRAY	A	5-1924939-2
SEE TABLE, SH 2	GRAY	A	5-1924939-1
SEE TABLE, SH 2	GRAY	A	5-1924939-0
SEE TABLE, SH 2	GRAY	A	4-1924939-9
SEE TABLE, SH 2	GRAY	A	4-1924939-8
SEE TABLE, SH 2	GRAY	A	4-1924939-7
SEE TABLE, SH 2	GRAY	A	4-1924939-6
SEE TABLE, SH 2	GRAY	A	4-1924939-5
SEE TABLE, SH 2	GRAY	A	4-1924939-4
SEE TABLE, SH 2	GRAY	A	4-1924939-3
SEE TABLE, SH 2	GRAY	A	4-1924939-2
SEE TABLE, SH 2	GRAY	A	4-1924939-1
SEE TABLE, SH 2	GRAY	A	4-1924939-0
SEE TABLE, SH 2	GRAY	A	3-1924939-9
SEE TABLE, SH 2	GRAY	A	3-1924939-8
SEE TABLE, SH 2	GRAY	A	3-1924939-7
SEE TABLE, SH 2	GRAY	A	3-1924939-6
SEE TABLE, SH 2	GRAY	A	3-1924939-5
SEE TABLE, SH 2	GRAY	A	3-1924939-4
SEE TABLE, SH 2	GRAY	A	3-1924939-3
SEE TABLE, SH 2	GRAY	A	3-1924939-2
SEE TABLE, SH 2	GRAY	A	3-1924939-1
SEE TABLE, SH 2	GRAY	A	3-1924939-0
SEE TABLE, SH 2	GRAY	A	2-1924939-9
SEE TABLE, SH 2	GRAY	A	2-1924939-8
SEE TABLE, SH 2	GRAY	A	2-1924939-7
SEE TABLE, SH 2	GRAY	A	2-1924939-6
SEE TABLE, SH 2	GRAY	A	2-1924939-5
SEE TABLE, SH 2	GRAY	A	2-1924939-4
SEE TABLE, SH 2	GRAY	A	2-1924939-3
SEE TABLE, SH 2	GRAY	A	2-1924939-2
SEE TABLE, SH 2	GRAY	A	2-1924939-1
SEE TABLE, SH 2	GRAY	A	2-1924939-0
SEE TABLE, SH 2	GRAY	A	1-1924939-9
SEE TABLE, SH 2	GRAY	A	1-1924939-8
SEE TABLE, SH 2	GRAY	A	1-1924939-7
SEE TABLE, SH 2	GRAY	A	1-1924939-6
SEE TABLE, SH 2	GRAY	A	1-1924939-5
SEE TABLE, SH 2	GRAY	A	1-1924939-4
SEE TABLE, SH 2	GRAY	A	1-1924939-3
SEE TABLE, SH 2	GRAY	A	1-1924939-2
SEE TABLE, SH 2	GRAY	A	1-1924939-1
SEE TABLE, SH 2	GRAY	A	1-1924939-0
SEE TABLE, SH 2	GRAY	A	1924939-9
SEE TABLE, SH 2	GRAY	A	1924939-8
SEE TABLE, SH 2	GRAY	A	1924939-7
SEE TABLE, SH 2	GRAY	A	1924939-6
SEE TABLE, SH 2	GRAY	A	1924939-5
SEE TABLE, SH 2	GRAY	A	1924939-4
SEE TABLE, SH 2	GRAY	A	1924939-3
SEE TABLE, SH 2	GRAY	A	1924939-2
ALL OPEN	GRAY	A	1924939-1

THIS DRAWING IS A CONTROLLED DOCUMENT.

DIMENSIONS: mm

TOLERANCES UNLESS OTHERWISE SPECIFIED:
0 PLC ±-
1 PLC ±-
2 PLC ±0.25
3 PLC ±-
4 PLC ±-
ANGLES ±-

MATERIAL - 1 -
FINISH - -

DWN DJ HARDY 29NOV2007
CHK AJ VASBINDER 03DEC2007
APVD AJ VASBINDER 03DEC2007
PRODUCT SPEC TBD
APPLICATION SPEC - 8
WEIGHT -

TE Connectivity

NAME PLUG ASSEMBLY, 96 POSITION, INDEX A - RIGHT EXIT, SEALED, GPEC II

SIZE A1 | CAGE CODE 00779 | DRAWING NO C-1924939 | RESTRICTED TO -

CUSTOMER DRAWING | SCALE 2:1 | SHEET 1 OF 3 | REV C4

4805 (3/13)

THIS DRAWING IS UNPUBLISHED. RELEASED FOR PUBLICATION 20
© COPYRIGHT 20 BY - ALL RIGHTS RESERVED.

REVISIONS

P	LTR	DESCRIPTION	DATE	DWN	APVD
	-	SEE SHEET 1	-	-	-

VEHICLE PLATFORM/APPLICATION	PART NUMBER
DASH HARNESS WK-WD	5-1924939-4
DASH HARNESS WK-WD	5-1924939-3
DASH HARNESS WK-WD	5-1924939-2
RU - DASH HARNESS ECM CONNECTOR FOR BASE/PHEV	5-1924939-1
CHRYSLER JEEP 523 ECU	5-1924939-0
LA CHASSIS-3.6L	4-1924939-9
LA CHASSIS-5.7L/6.4L MAN TRANS	4-1924939-8
LA CHASSIS-5.7L/6.4L AUTO TRANS	4-1924939-7
LA CHASSIS-6.2L MAN TRANS	4-1924939-6
LA CHASSIS-6.2L AUTO TRANS	4-1924939-5
WK-WD 2015	4-1924939-4
2015 KL	4-1924939-3
2015 KL	4-1924939-2
WK-WD 2015	4-1924939-1
WK-WD 2015	4-1924939-0
WK-WD 2015	3-1924939-9
WK-WD 2015	3-1924939-8
WK-WD 2015	3-1924939-7
WK-WD 2015	3-1924939-6
2015 RT ENGINE HARNESS	3-1924939-5
2015 UF	3-1924939-4
2014 KL	3-1924939-3
2013 KL	3-1924939-2
CHRYSLER JC49	3-1924939-1
JS MY 2012 WORLD WO PZEV COMP	3-1924939-0
JS MY 2012 WORLD WO PZEV COMP	2-1924939-9
JS MY 2012 WORLD WO PZEV COMP	2-1924939-8
JS MY 2012 WORLD WO PZEV COMP	2-1924939-7
2012 LC	2-1924939-6
2012 LC	2-1924939-5
2012 LD & LX	2-1924939-4
2012 LC	2-1924939-3
CHRYSLER JC49 2011/12 HDLP PHOENIX, RT	2-1924939-2
PM/MK GPEC 2 ENG COMPARTMENT CONN	2-1924939-1
JS WORLD WO PZEV	2-1924939-0
JC49 POWER CONTROL UNIT	1-1924939-9
JC49 POWER CONTROL UNIT	1-1924939-8
JC49 POWER CONTROL UNIT	1-1924939-7
LC HLD-2011 LC	1-1924939-6
RT - TCM	1-1924939-5
JS HDLP & DASH CONN, 62 TE	1-1924939-4
JS HDLP & DASH CONN, 2.4L 40TES	1-1924939-3
JS HDLP & DASH CONN, 3.6L	1-1924939-2
JS HDLP & DASH CONN, 2.4L DDCT	1-1924939-1
LX HLD-2011 LC SI w TI10	1-1924939-0
LX HLD-2011 LC SI w TI10	1924939-9
PM/MK GPEC 2 ENG COMPARTMENT CONN	1924939-8
CHRYSLER JC - II WORLD ENG MTX LHD & RHD	1924939-7
CHRYSLER JC - II WORLD ENG ATX LHD CMU	1924939-6
CHRYSLER JC - II WORLD ENG ATX LHD BUX & RHD	1924939-5
CHRYSLER JC - II PHOENIX LHD CMU	1924939-4
CHRYSLER JC - II PHOENIX LHD BUX & RHD	1924939-3
HD/LP & DASH - ALL HLD	1924939-2
ALL OPEN	1924939-1

CAVITIES WITH A NUMERIC SYMBOL INDICATE CLOSED TERMINAL HOLE POSITIONS
BLANK CAVITIES INDICATE OPEN TERMINAL HOLE POSITIONS

PIN OUT CONFIGURATION TABLE 4

THIS DRAWING IS A CONTROLLED DOCUMENT.

DIMENSIONS: mm

TOLERANCES UNLESS OTHERWISE SPECIFIED:
0 PLC ±-
1 PLC ±-
2 PLC ±0.25
3 PLC ±-
4 PLC ±-
ANGLES ±-

MATERIAL - -
FINISH - -

DWN DJ HARDY 29NOV2007
CHK AJ VASBINDER 03DEC2007
APVD AJ VASBINDER 03DEC2007
PRODUCT SPEC TBD
APPLICATION SPEC - 8
WEIGHT -

TE Connectivity

NAME PLUG ASSEMBLY, 96 POSITION, INDEX A - RIGHT EXIT, SEALED, GPEC II

SIZE	CAGE CODE	DRAWING NO	RESTRICTED TO
A1	00779	C-1924939	-

CUSTOMER DRAWING SCALE 2:1 SHEET 2 OF 3 REV C4

4805 (3/13)

THIS DRAWING IS UNPUBLISHED. RELEASED FOR PUBLICATION 20
© COPYRIGHT 20 BY - ALL RIGHTS RESERVED.

REVISIONS					
P	LTR	DESCRIPTION	DATE	DWN	APVD
	-	SEE SHEET 1	-	-	-

	1	2	3	4	5	6	7	8	9	10	11	12	13	14	15	16	17	18	19	20	21	22	23	24
ALL CLOSED	1	2	3	4	5	6	7	8	9	10	11	12	13	14	15	16	17	18	19	20	21	22	23	24
DASH FEMALE WK-WD 2018	1	2	3	4	5	6	7	8	9	10	11	12	13	14	15	16	17	18	19	20	21			
2018 LA HDLP & DASH WIRE HARNESS	1	2	3	4	5	6	7	8	9	10	11	12	13	14	15	16		18	19	20	21			24
2018 LA/LD HDLP & DASH WIRE HARNESS	1	2	3	4	5	6	7	8	9	10	11	12	13	14	15	16	17	18	19	20	21			24
JL DASH	1	2	3	4	5	6	7	8	9	10	11	12	13	14	15	16	17	18	19	20	21			24
JL DASH	1	2	3	4	5	6	7	8	9	10	11	12	13	14	15	16	17	18	19	20				24
JL DASH	1	2	3	4	5	6	7	8	9	10	11	12	13	14	15	16	17	18	19	20	21			24
DASH HARNESS WK-WD	1	2	3	4	5	6	7	8	9	10	11	12	13	14	15	16	17	18	19	20	21	22		24
DASH HARNESS WK-WD	1	2	3	4	5	6	7	8	9	10	11	12	13	14	15	16	17	18	19	20	21	22		
DASH HARNESS WK-WD	1	2	3	4	5	6	7	8	9	10	11	12	13	14	15	16	17	18	19	20	21	22		
DASH HARNESS WK-WD	1	2	3	4	5	6	7	8	9	10	11	12	13	14	15	16	17	18	19	20	21	22		
VEHICLE PLATFORM/APPLICATION	1	2	3	4	5	6	7	8	9	10	11	12	13	14	15	16	17	18	19	20	21	22	23	24

	25	26	27	28	29	30	31	32	33	34	35	36	37	38	39	40	41	42	43	44	45	46	47	48
ALL CLOSED	25	26	27	28	29	30	31	32	33	34	35	36	37	38	39	40	41	42	43	44	45	46	47	48
DASH FEMALE WK-WD 2018	25	26	27	28		30	31	32		34	35	36	37	38	39	40	41				45	46	47	
2018 LA HDLP & DASH WIRE HARNESS	25	26	27	28	29	30	31	32		34	35	36	37	38		40	41				45	46	47	
2018 LA/LD HDLP & DASH WIRE HARNESS	25	26	27	28	29	30	31	32		34	35	36	37	38	39	40	41				45	46	47	
JL DASH	25	26	27		29	30	31			34	35	36	37	38	39	40	41		43		45		47	
JL DASH	25	26	27		29	30	31	32		34	35	36	37	38	39	40	41		43		45		47	
JL DASH	25	26	27		29	30	31	32		34	35	36	37	38	39	40	41		43		45		47	
DASH HARNESS WK-WD	25	26	27	28	29	30	31	32		34	35	36	37	38	39	40	41		43		45		47	
DASH HARNESS WK-WD	25	26	27	28		30	31	32		34	35	36	37	38	39	40	41		43		45	46	47	
DASH HARNESS WK-WD	25	26	27	28		30	31	32		34	35	36	37	38	39	40	41		43		45		47	
DASH HARNESS WK-WD	25	26	27	28		30	31	32		34	35	36	37	38	39	40	41		43		45	46	47	
VEHICLE PLATFORM/APPLICATION	25	26	27	28	29	30	31	32	33	34	35	36	37	38	39	40	41	42	43	44	45	46	47	48

	49	50	51	52	53	54	55	56	57	58	59	60	61	62	63	64	65	66	67	68	69	70	71	72
ALL CLOSED	49	50	51	52	53	54	55	56	57	58	59	60	61	62	63	64	65	66	67	68	69	70	71	72
DASH FEMALE WK-WD 2018	49	50	51					56						62	63	64	65	66					71	
2018 LA HDLP & DASH WIRE HARNESS		50	51					56						62	63	64	65	66					71	
2018 LA/LD HDLP & DASH WIRE HARNESS		50	51					56						62	63	64	65	66					71	
JL DASH	49	50	51				55			58	59	60		62	63	64	65	66						
JL DASH	49	50	51				55	56		58	59	60		62	63	64	65							
JL DASH	49	50	51				55	56		58	59	60		62	63	64	65	66						
DASH HARNESS WK-WD	49	50	51				55	56		58	59	60	61	62	63	64	65	66					71	
DASH HARNESS WK-WD	49	50	51				55	56		58	59	60	61	62	63	64	65	66					71	
DASH HARNESS WK-WD	49	50	51				55	56		58	59	60	61	62	63	64	65	66					71	
DASH HARNESS WK-WD	49	50	51				55	56		58	59	60	61	62	63	64	65	66					71	
VEHICLE PLATFORM/APPLICATION	49	50	51	52	53	54	55	56	57	58	59	60	61	62	63	64	65	66	67	68	69	70	71	72

	73	74	75	76	77	78	79	80	81	82	83	84	85	86	87	88	89	90	91	92	93	94	95	96	
ALL CLOSED	73	74	75	76	77	78	79	80	81	82	83	84	85	86	87	88	89	90	91	92	93	94	95	96	9-1924939-9
DASH FEMALE WK-WD 2018					77	78						84	85	86	87		89	90					95		6-1924939-4
2018 LA HDLP & DASH WIRE HARNESS					77	78						84	85	86	87		89	90							6-1924939-3
2018 LA/LD HDLP & DASH WIRE HARNESS					77	78						84	85	86	87		89	90							6-1924939-2
JL DASH						78			81			84	85	86	87		89	90					95		6-1924939-1
JL DASH						78			81			84	85		87		89	90					95		6-1924939-0
JL DASH						78			81			84	85	86	87		89	90					95		5-1924939-9
DASH HARNESS WK-WD						78					83	84	85	86	87		89	90							5-1924939-8
DASH HARNESS WK-WD					77						83	84	85	86	87		89	90					95		5-1924939-7
DASH HARNESS WK-WD						78					83	84	85	86	87		89	90							5-1924939-6
DASH HARNESS WK-WD					77	78					83	84	85	86	87		89	90					95		5-1924939-5
VEHICLE PLATFORM/APPLICATION	73	74	75	76	77	78	79	80	81	82	83	84	85	86	87	88	89	90	91	92	93	94	95	96	PART NUMBER

CAVITIES WITH A NUMERIC SYMBOL INDICATE CLOSED TERMINAL HOLE POSITIONS
BLANK CAVITIES INDICATE OPEN TERMINAL HOLE POSITIONS

PIN OUT CONFIGURATION TABLE ⚠4

THIS DRAWING IS A CONTROLLED DOCUMENT.	
DIMENSIONS: mm	TOLERANCES UNLESS OTHERWISE SPECIFIED: 0 PLC ±- 1 PLC ±- 2 PLC ±0.25 3 PLC ±- 4 PLC ±- ANGLES ±-
MATERIAL - -	FINISH - -
DWN DJ HARDY	29NOV2007
CHK AJ VASBINDER	03DEC2007
APVD AJ VASBINDER	03DEC2007
PRODUCT SPEC	TBD
APPLICATION SPEC	-
WEIGHT	-
TE Connectivity	
NAME	PLUG ASSEMBLY, 96 POSITION, INDEX A - RIGHT EXIT, SEALED, GPEC II
SIZE A1	CAGE CODE 00779
DRAWING NO	C-1924939
RESTRICTED TO	-
SCALE 2:1	SHEET 3 OF 3
REV	C4
CUSTOMER DRAWING	

4805 (3/13)