Alle Rechte vorbehalten/ *All rights reserved*

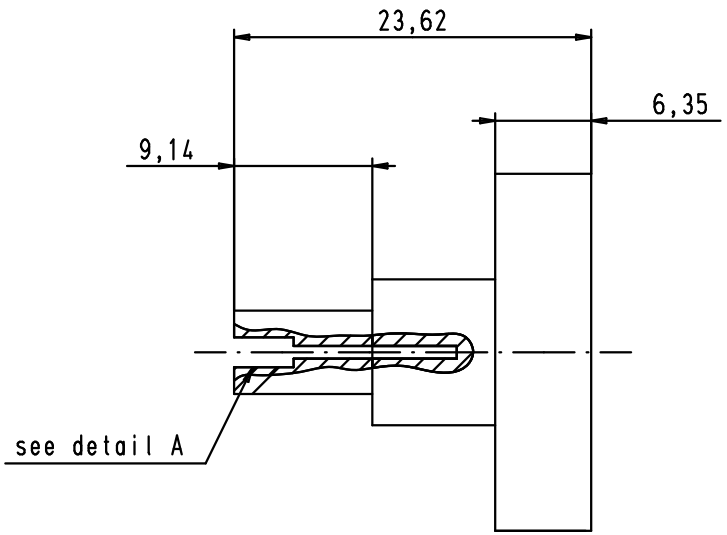

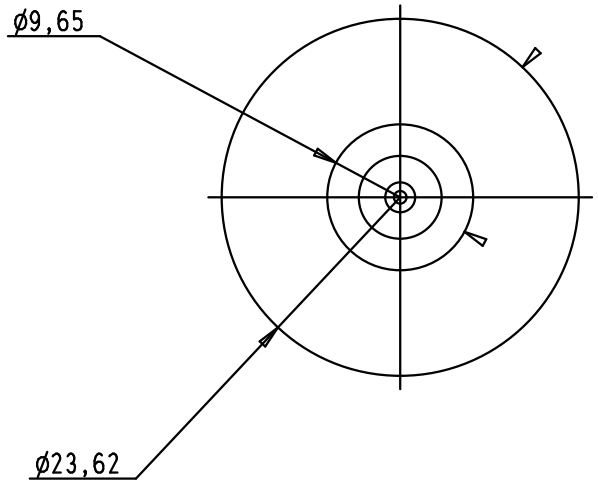

detail A
scale 4:1

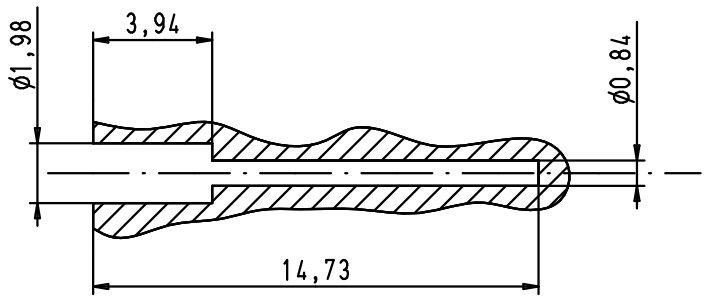

used with hand crimp tool : 09 99 000 0501
and crimp contact : 09 56 000 8485

				Dat.	Name			
			Detail.	27/02/06	JMDR	All Dim. in mm Orig. Size DIN A 4	positioner for single male high density crimp contacts	Maßstab/ *Scale* 2:1
			Insp.	01/03/12	JB			
			Stand.					
36293	01/03/12	SD	HARTING ELEKTRONIK F-95972 Paris				TB 09 99 000 0525	Blatt/ *Page* 1/1
33433	27/02/06	JMDR					Sub.	
Mod.	Dat.	Name						