SHEET OF

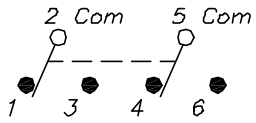

CIRCUIT: DPDT

SWITCH FUNCTION		
POS. 1	POS. 2	POS. 3
ON	NONE	(ON)
2-3,5-6	OPEN	2-1,5-4

( )=MOMENTARY

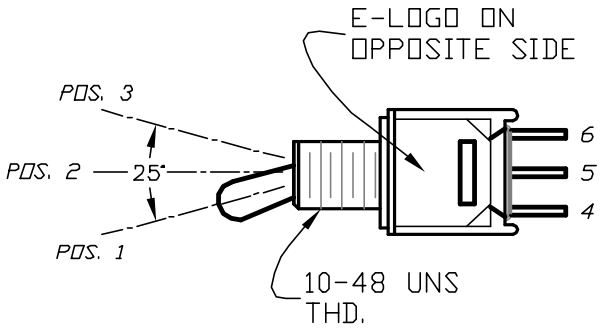

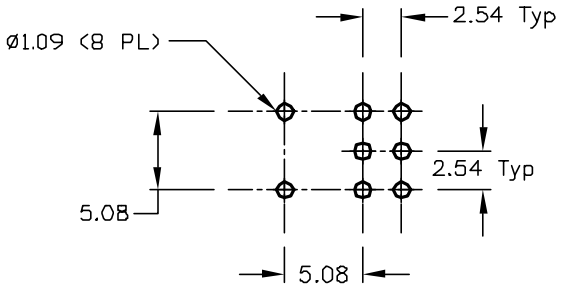

RECOMMENDED P.C.B LAYOUT

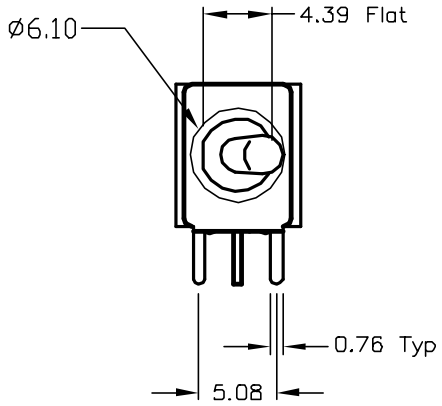

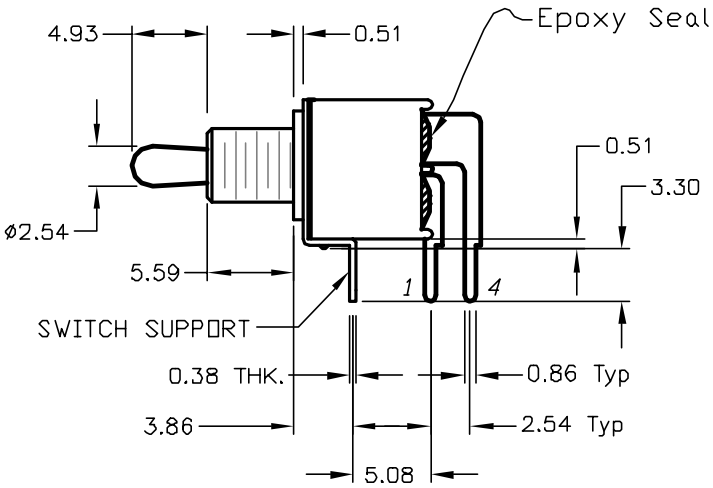

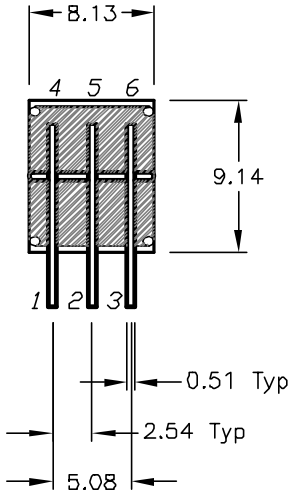

NOTES:

1. ALL DIMENSIONS IN MM
2. GENERAL TOLERANCE: X.X=±0.4
   X.XX=±0.25
3. TERM. NOS. FOR REF. ONLY
4. CONTACT RATING: 0.4(VA) Max. @20VAC OR DC Max.
5. FIXED TERMINAL & MOVING CONTACT: Cu alloy w/ Gold plate over Ni plate.
6. ELECTRIC LIFE: 30,000 make-and-break cycles at full load.
7. INSULATION RESISTANCE: 1,000 M ohm min.
8. DIELECTRIC STRENGTH: 1,000 V RMS @sea level.
9. OPERATING TEMP.: -30°C to 85°C

REV.	ECN No.	DESCRIPTION	DATE	CHKD
A	12312	RELEASED FOR PRODUCTION	7/19/02	CJB

THE INFORMATION CONTAINED IN THIS DOCUMENT IS PROPRIETARY TO E-SWITCH AND IS NOT TO BE COPIED OR TRANSFERRED

E-SWITCH®

TITLE 200 MDP-2 T2 B1 M6 R E (GOLD CONTACTS)

SCALE	DATE	DR	DWG	REV
2:1	7/19/02	CJB	T211084	A