| REVISIONS | | | | |
|---|---|---|---|---|
| REV. | ECO. NO | DESCRIPTION | DATE | BY |
| A | 1198 | INITIAL RELEASE | 8/2/2007 | VJ |
| B | 1810 | ADD HB TERMINATION, UPDATE LAYOUT | 9/25/2008 | ASK |

# PART NUMBER

**_ _ B106D_ _ _ - S621**

**MATERIALS (INSULATOR / CONTACT)**

**E = BLACK, PBT/PHOSPHOR BRONZE**
OPERATING TEMP: -65°C TO +125°C
PROCESSING TEMP: 260°C FOR 10 SECS MAX

**R = BLACK, PPS/PHOSPHOR BRONZE**
OPERATING TEMP: -65°C TO +125°C
PROCESSING TEMP: 260°C FOR 120 SECS MAX

**G = BLACK, PA9T/PHOSPHOR BRONZE**
OPERATING TEMP: -65°C TO +125°C
PROCESSING TEMP: 260°C FOR 120 SECS MAX

**H = BLACK, PBT/BERYLLIUM COPPER**
OPERATING TEMP: -65°C TO +125°C
PROCESSING TEMP: 260°C FOR 10 SECS MAX

**A = BLACK, PPS/BERYLLIUM COPPER**
OPERATING TEMP: -65°C TO +150°C
PROCESSING TEMP: 260°C FOR 120 SECS MAX

**J = BLACK, PA9T/BERYLLIUM COPPER**
OPERATING TEMP: -65°C TO +150°C
PROCESSING TEMP: 260°C FOR 120 SECS MAX

(CONSULT FACTORY FOR OTHER MATERIALS)

**MOUNTING STYLE**
D = FLUSH MOUNTING
S = SIDE MOUNTING
N = NO MOUNTING EARS
T = FLUSH MOUNTING WITH, #4-40 THREADED INSERT
R = BOARD LOCK

**TERMINATION TYPE**
HA = .100" [2.54 mm] STAGGERED DIP SOLDER, .050" CENTERS
HB = .170" [4.32 mm] STAGGERED DIP SOLDER, .050" CENTERS

**PLATING**
ALL PLATINGS ARE LEAD FREE AND HAVE .000050" NICKEL UNDERPLATE

| | CONTACT SURFACE | TERMINATION |
|---|---|---|
| B = | .000010" GOLD | .000100" PURE TIN, MATTE |
| C = | .000030" GOLD | .000100" PURE TIN, MATTE |

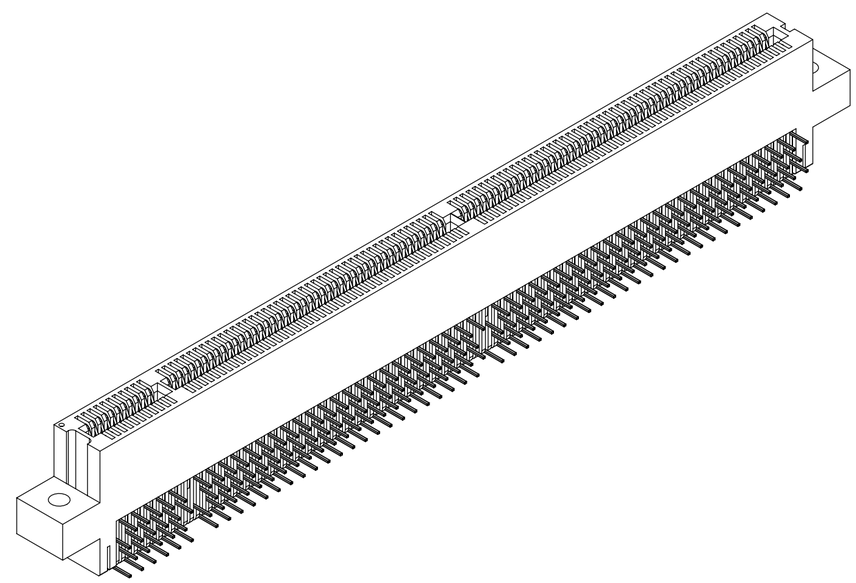

NOTES:

1. MATERIALS:
   A. INSULATOR: SEE PART NUMBER CODING.
   B. CONTACT: SEE PART NUMBER CODING.
   C. PLATING: SEE PART NUMBER CODING.
2. THERMAL:
   A. OPERATING TEMPERATURE: SEE PART NUMBER CODING.
   B. PROCESSING TEMP: SEE PART NUMBER CODING.
   C. UL FLAMMABILITY RATING: 94V-0.
3. ELECTRICAL:
   A. DIELECTRIC WITHSTANDING VOLTAGE: MATED CONNECTOR MUST EXHIBIT NO EVIDENCE OF BREAKDOWN, FLASHOVER, OR DETERIORATION FROM AN APPLIED VOLTAGE OF 225 VAC (VALUE HAS BEEN DE-RATED), RMS 60 Hz WHEN TESTED IN ACCORDANCE WITH MIL-STD-1344, METHOD 3001. DURATION OF APPLICATION SHALL BE 5 SECS MIN.
   B. INSULATION RESISTANCE (IR): 5,000 MEGOHMS @ 500 VOLTS ±10% WHEN TESTED IN ACCORDANCE WITH MIL-STD-1344, METHOD 3003 @ 25°C.
   C. CONTACT RESISTANCE: 30 MILLIOHM MAX AT RATED CURRENT WHEN TESTED PER MIL-STD-202, METHOD 307 @ 25°C ±3°C.
   D. CURRENT RATING: 1 AMP PER CONTACT.
4. MECHANICAL:
   A. CONNECTOR IDENTIFICATION: THE PART SHALL BE MARKED WITH A LOT CODE AS A MINIMUM. IF SPACE PERMITS ALSO MARK PART WITH SULLINS WEBSITE, AND PART NUMBER.
   B. DURABILITY: 500 CYCLES MINIMUM.
   C. BOARD THICKNESS ACCOMMODATED: .062 ±.008"
   D. BOARD INSERTION FORCE: 16 OZ MAX PER CONTACT PAIR WHEN USING A .062" TEST BLADE. INTERNAL INSPECTION TO BE PER SULLIN'S WORK INSTRUCTION W17.3-01.
   E. BOARD WITHDRAWAL FORCE: 1 OUNCE MINIMUM PER CONTACT PAIR USING .062" PCB.
5. MODIFICATION:
   A. CARDSLOT BARRIERS WITHOUT GUIDEPOST, 11/45/50 POSITIONS (MCA).

RoHS COMPLIANT

**CUSTOMER COPY**

UNLESS OTHERWISE SPECIFIED:
DIMENSIONS ARE IN INCHES[MM]
TOLERANCES:
ANGULAR: ± 30'
.XX=± .02 [.508]
.XXX=± .005 [.1270]
.XXXX=± .0005 [.0127]
SURFACE FINISH: 63 Ra
REMOVE ALL BURRS AND SHARP EDGES .010 MAX

INTERPRET DIMENSIONS AND GEOMETRIC TOLERANCING
PER: ANSI Y14.5M-1994

| | DATE | NAME |
|---|---|---|
| DRAWN | 8/2/2007 | V. JARA |

THE INFORMATION HEREIN CONTAINS PROPIETARY INFORMATION OF SULLINS ELECTRONICS AND IS NOT TO BE REPRODUCED, USED OR DISCLOSED TO OTHERS FOR ANY PURPOSE EXCEPT AS SPECIFICALLY AUTHORIZED IN WRITING BY AN OFFICER OF SULLINS ELECTRONICS.

SULLINS CONNECTOR SOLUTIONS

DESCRIPTION: EDGECARD, .050 CC, RAB

PART NUMBER: **_ _B106D_ _ _-S621, (DHA, DHB)**

| SIZE | DWG. NO. | REV |
|---|---|---|
| C | C10848 | B |

SCALE: 2:1 | SHEET 1 OF 3

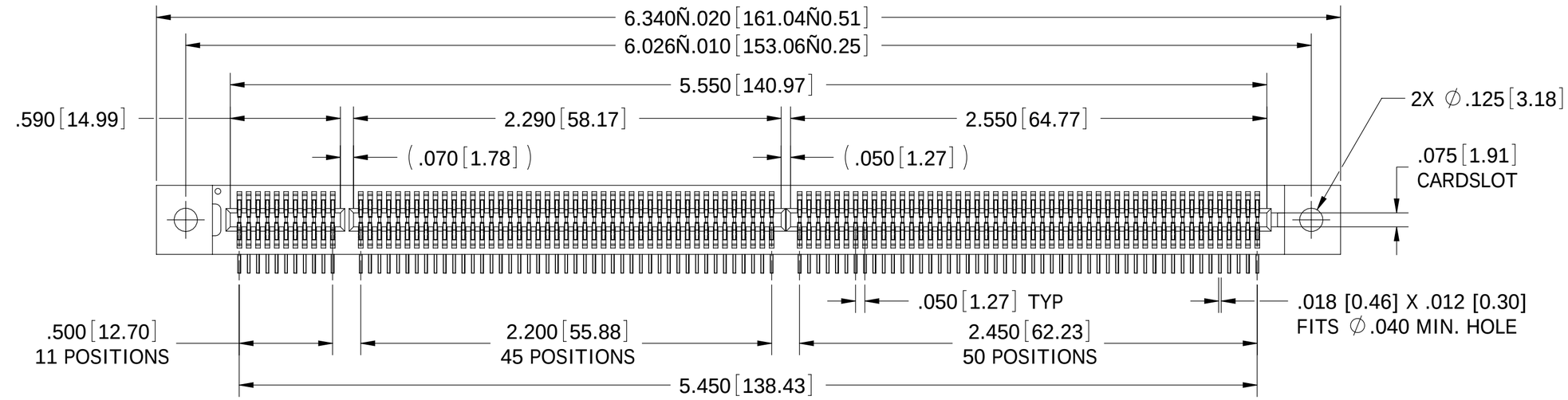


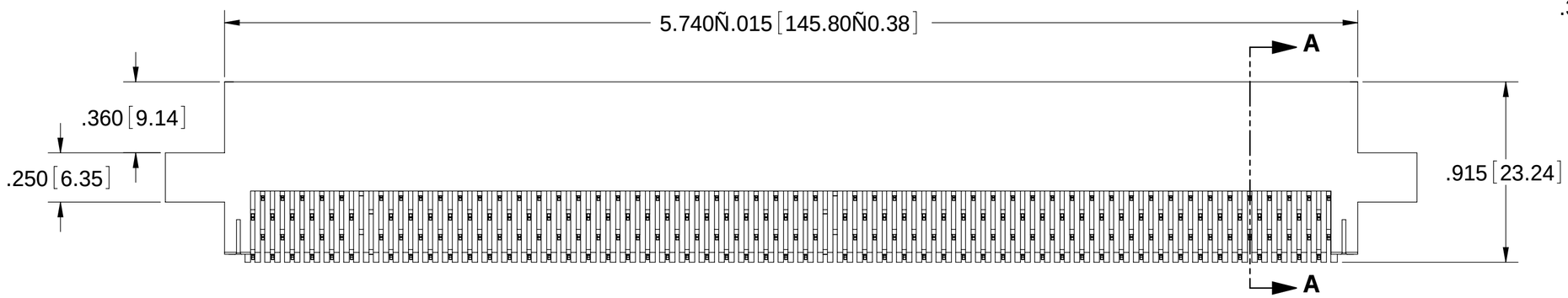


**_ _ B106D_ _D - S621**

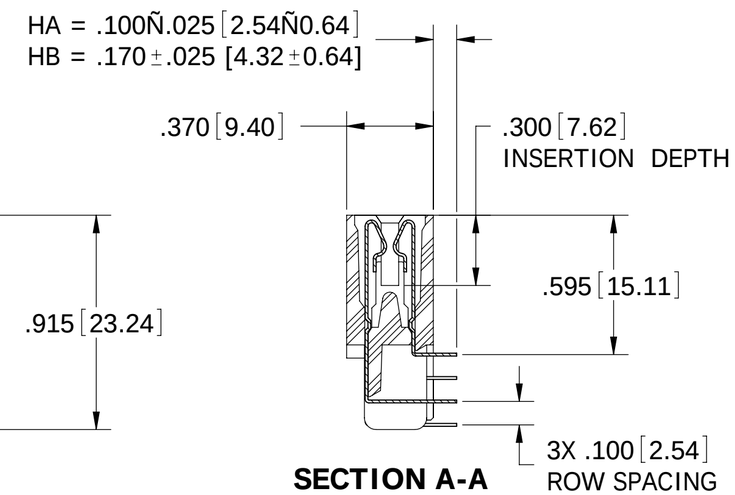


**SECTION A-A**

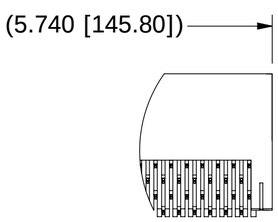


**_ _ B106D_ _N - S621**

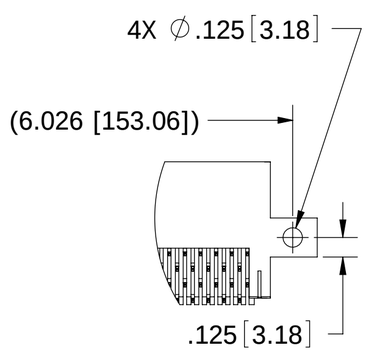


**_ _ B106D_ _S - S621**

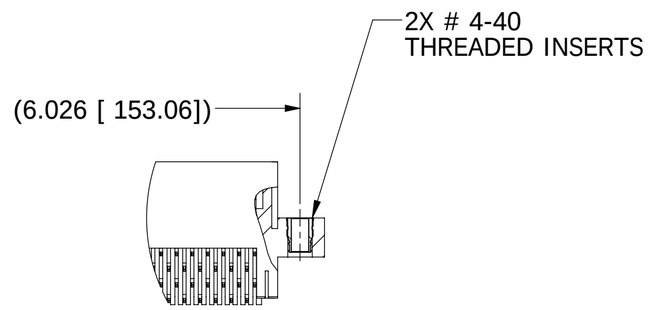


**_ _ B106D _ _T - S621**

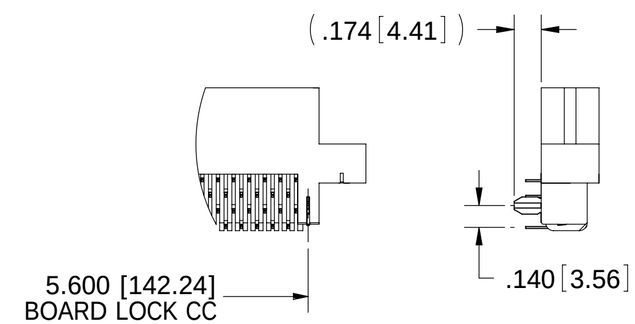


**_ _ B106D_ _R - S621**

**CUSTOMER COPY**

# MOUNTING STYLES

RoHS COMPLIANT

SULLINS CONNECTOR SOLUTIONS

| | |
|---|---|
| DESCRIPTION | EDGECARD, .050 CC, RAB |
| PART NUMBER | _ _B106D_ _ _-S621, (DHA, DHB) |
| SIZE C | DWG. NO. C10848 |
| REV | B |
| SCALE: 2:1.5 | SHEET 2 OF 3 |

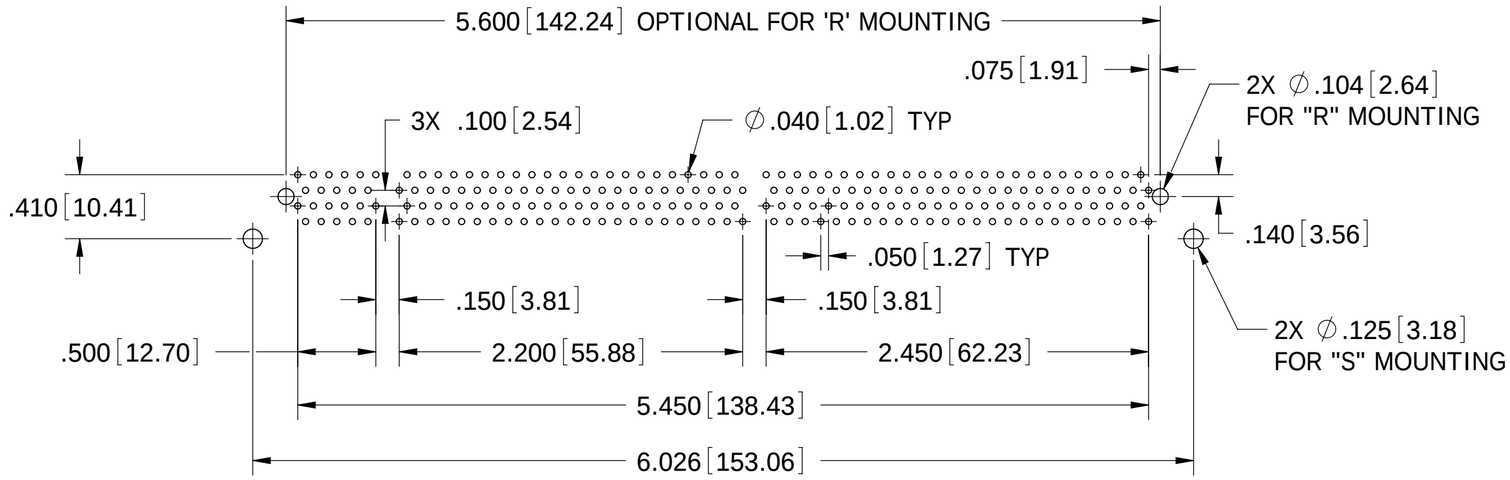


**PCB LAYOUT, CONNECTOR SIDE**

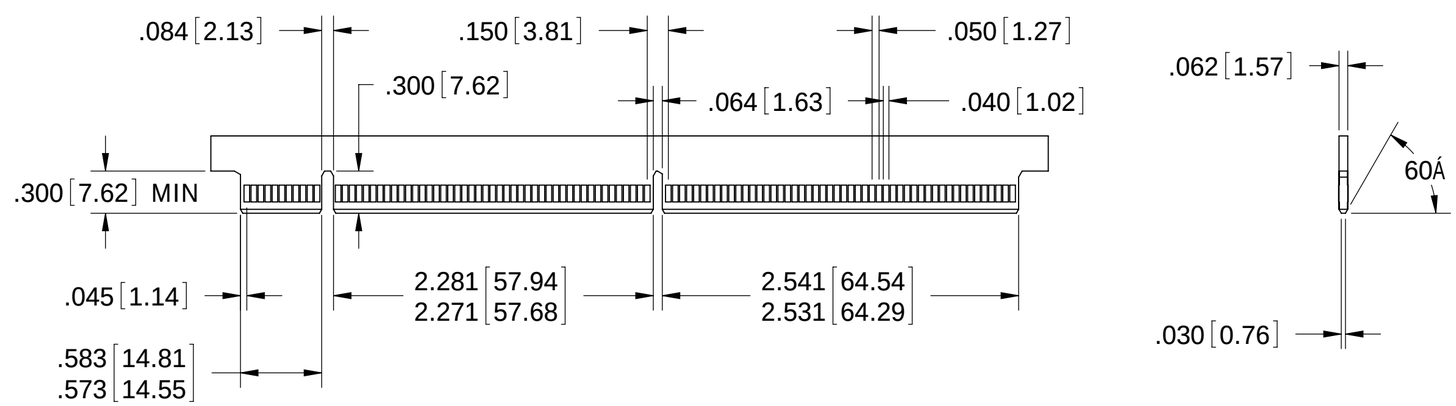


**DAUGHTER CARD LAYOUT**

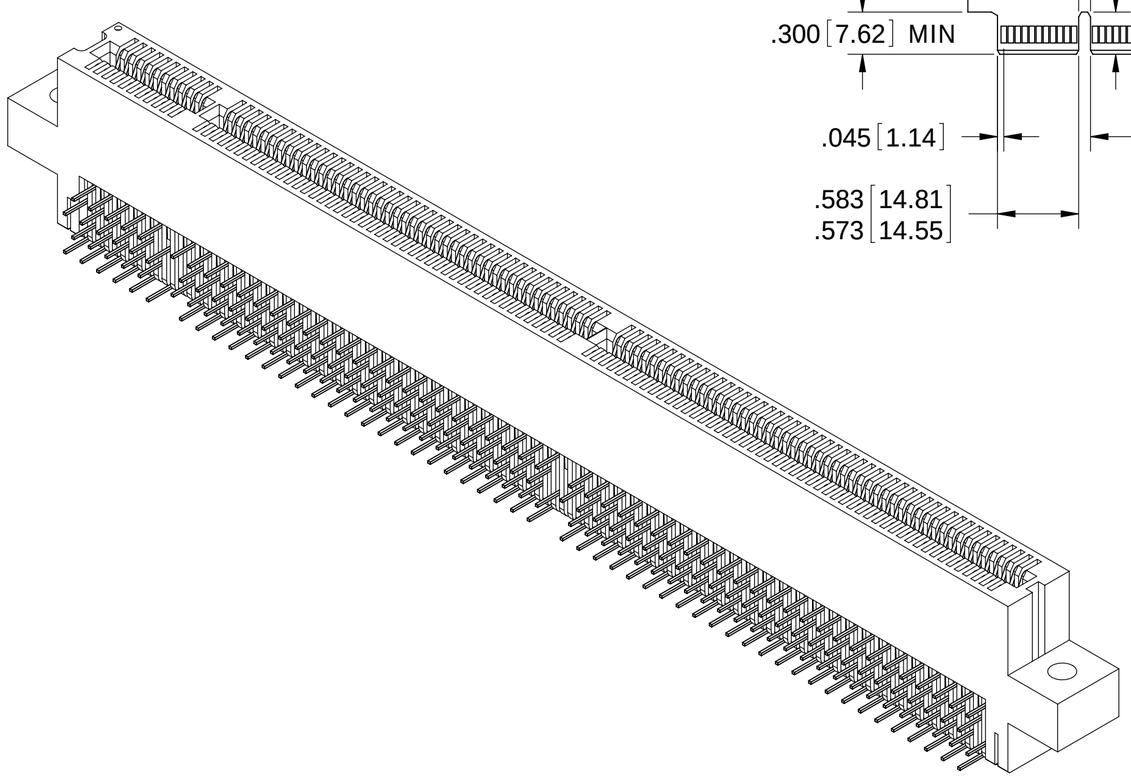

**CUSTOMER COPY**

RoHS COMPLIANT

SULLINS CONNECTOR SOLUTIONS

| | |
|---|---|
| DESCRIPTION | EDGECARD, .050 CC, RAB |
| PART NUMBER | _ _B106D_ _ _-S621, (DHA, DHB) |
| SIZE C | DWG. NO. C10848 |
| REV | B |
| SCALE: 1:1 | SHEET 3 OF 3 |

FILE NAME: Z:\COMPONENTS\Part Assemblies\Customer Drawings\Customer Drawings for Catalog\C10848, _ _B106D_ _ _-S621, (DHA, DHB) PRINT: 10/9/2008