DRAWING MADE IN THIRD ANGLE PROJECTION
THIS DRAWING IS UNPUBLISHED. RELEASED FOR PUBLICATION ,19 .
© COPYRIGHT 19 BY AMP INCORPORATED. ALL INTERNATIONAL RIGHTS RESERVED.

LOC	DIST
CM	54

REVISIONS

P	F	ZONE	LTR	DESCRIPTION	DATE	APPD
			B	REVISED PER EC 0730-4230-93	1-3-94	LS/RS

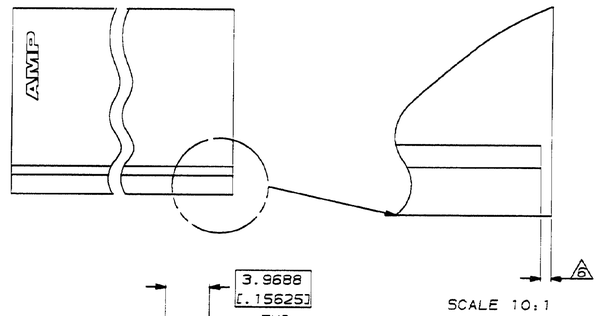

1. UNIT ACCEPTS 1.14 [.045] SQUARE OR ROUND POST.
2. UNIT ACCEPTS STANDARD SL-156 CONTACTS.
3. UNIT ACCEPTS KEYING PLUG 640254-1 AND KEYING PIN 640255-1.
4. CIRCUIT I.D. NUMBER(S), TO BE LOCATED SEQUENTIALLY AS SHOWN.
5. DIMENSIONS IN BRACKETS ARE IN INCHES.
6. OPTIONAL CONSTRUCTION (BOTH CORNERS) UP TO 1.27 [.050].
7. REFERENCE: THIS PART IS THE SAME AS 640250-8, EXCEPT FOR OPTIONAL CIRCUIT I.D. MARKING IS NOT ALLOWED.

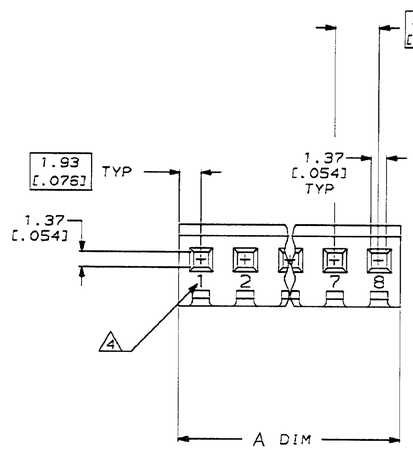

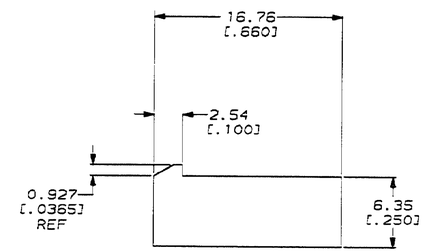

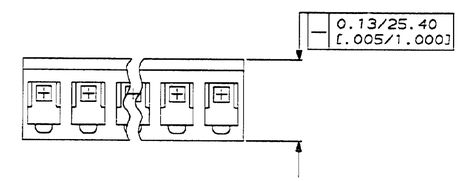

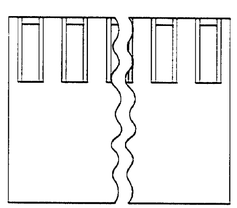

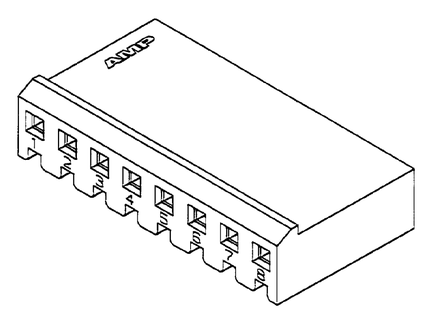

3-DIMENSIONAL MODEL
NTS

A ±0.25 [.010]	NO. OF CIRCUITS	PART NO
31.65 [1.246]	8	770696-8

DO NOT SCALE PRINT.
UNLESS SPECIFIED
DIMENSIONS IN mm [INCHES]
TOLERANCES ON :
2 PLC DEC = -
3 PLC DEC = 0.13 [.005]
ANGLES = 0°30'

MATERIAL: NYLON, UL 94V-0 NATURAL

FINISH: -

DR 7-31-92 B. LEWIS
CHK 7-31-92 R. SWING
APPD 9-28-92 E. BEILES
APPD 9-28-92 E. BEILES
PRODUCT SPEC -
APPLICATION SPEC -
WEIGHT -

AMP Incorporated
Harrisburg, PA 17105-3608

NAME: HOUSING WITH LOCKING RAMP, SL-156

SIZE D | CAGE CODE 00779 | DRAWING NO 770696

SCALE 4:1 | SHEET 1 OF 1

METRIC

CUSTOMER DRAWING