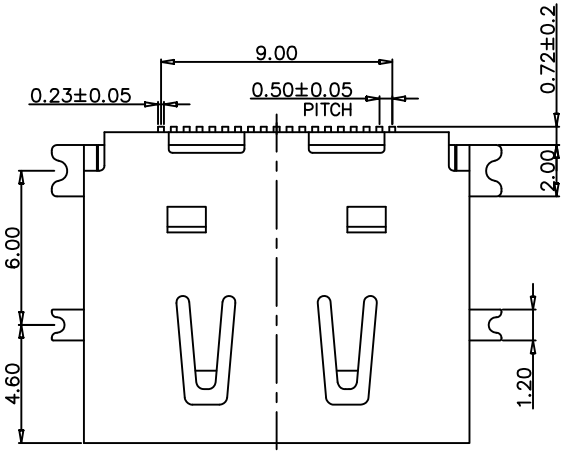

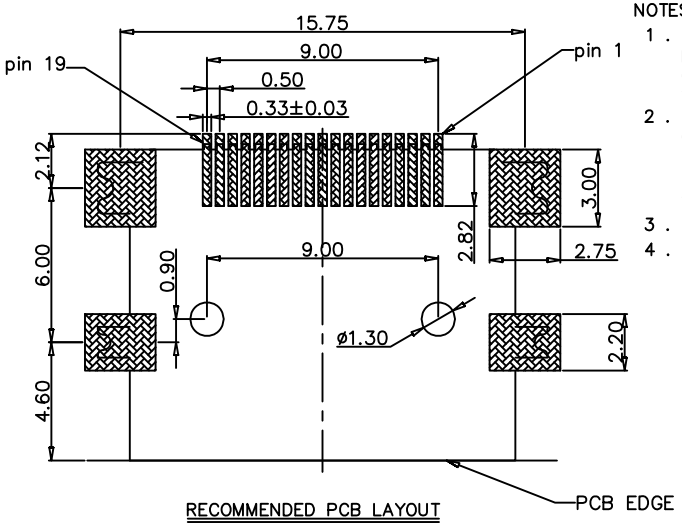

RECOMMENDED PCB LAYOUT
TOLERANCE: ±0.05mm
RECOMMEND PCB THICKNESS: 1.60mm

NOTES:

1 . MATERIAL:
HOUSING&COVER: THERMOPLASTIC HIGH-TEMP UL94V-0 COLOR: BLACK.
CONTACT: COPPER ALLOY
SHELL: COPPER ALLOY&SPCC

2 . FINISH:
CONTACT: Au SEE TABLE 1.
80u"~120u" Tin PLATE ON SOLDER TAIL AREA,
50u"~80u" Ni BASE-PLATE OVER ALL.
SHELL: Ni PLATED OR Au PLATED

3 . APPLIED TO IR SOLDERING PROCESS.

4 . SPECIFICATION:
4.1: ELECTRICAL CHARACTERISTICS
CONTACT CURRENT RATING: 0.5A MIN.
DIELECTRIC WITHSTANDING VOLTANGE: 300V AC
INSULATION RESISTANCE: a.UNAMTE 100MΩ MIN. AT 500V/DC
b.MATE 10MΩ MIN. AT 150V/DC
CONTACT RESISTANCE: 10mΩ MAX.
TEMPERATURE RANGE: -20℃ TO +85℃
4.2: MECHANICAL:
INSERTION FORCE: 44.1N MAX.
WITHDRAWAL FORCE: 9.8N MIN. 39.2N MAX.
DURABILITY: 10,000 CYCLES

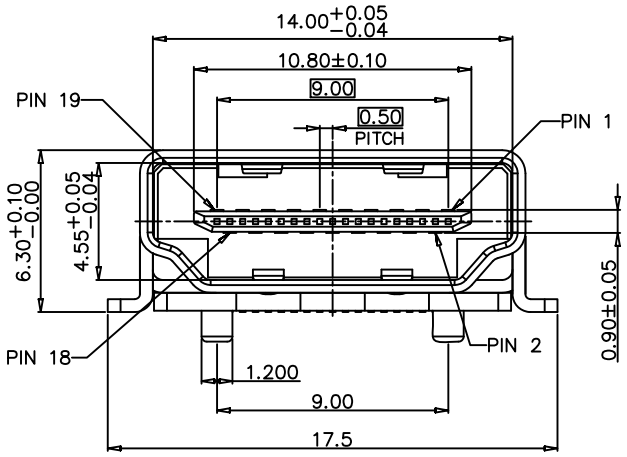

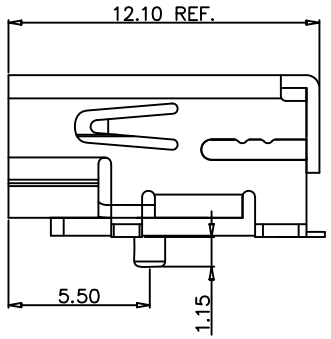

14/01/17	Jody		NEW DWG		A0
DATE	DR.BY	ECN.NO.	DESCRIPTION	MARK	VER.

-TOLERANCES- UNLESS OTHERWISE SPECIFIED			CnC Tech,LLC					
				TITLE: HDMI A Type Female 19P SMT with 4 SMT Shell Tails & Locating Pegs , G/F, Black				
X.X ±0.38	X.X° ±2°		APPD:	PRODUCT NO: 2000-1-2-41-00-BK				
X.XX ±0.25	X.XX° ±1°		CHECK:	DATE	SCALE	UNIT	TYPE	PAGE
X.XXX ±0.13	X.XXX° ±0.5°		DRAW:	2014/01/17	1:1	mm	Z	1 / 1