MODEL NO.	PACKAGING
147-0901-901	ONE PCS PER BAG

REV	ECO	DATE
001	ECO-17-0032	11/28/2017
002	ECO-18-0020	08/21/2018

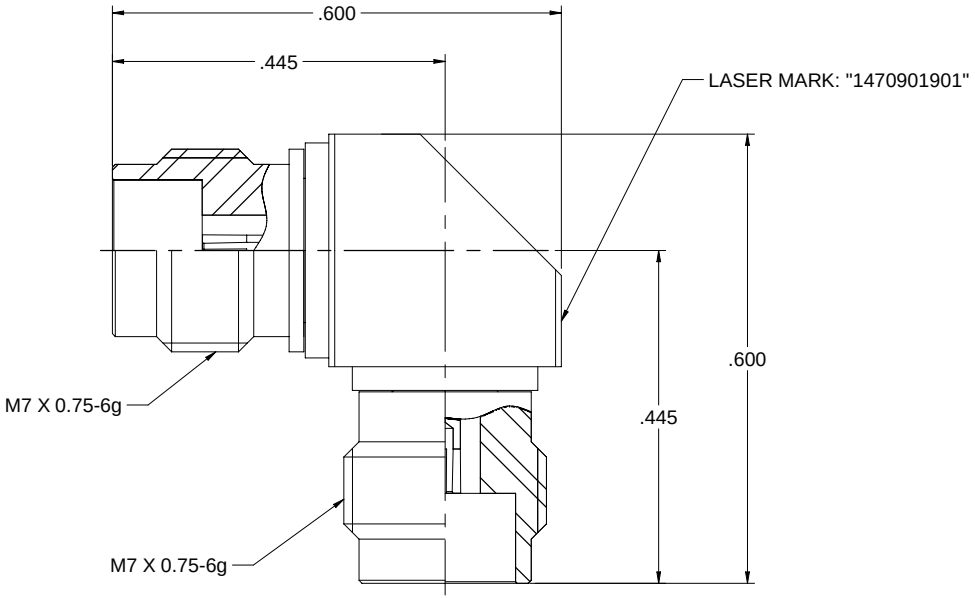

NOTES: UNLESS OTHERWISE SPECIFIED

1. MATERIAL & FINISH:
   1.1 BODY: PASSIVATED STAINLESS STEEL
   1.2 CONTACT PIN : GOLD PLATED BERYLLIUM COPPER
   1.3 INSULATOR: ULTEM 1000 AMBER

2. ELECTRICAL:
   2.1 IMPEDANCE: 50 OHMS
   2.2 FREQUENCY RANGE: DC-50 GHz
   2.3 VOLTAGE STANDING WAVE RATIO: 1.2 MAX
   2.4 DIELECTRIC WITHSTANDING VOLTAGE: 500 VRMS MIN
   2.5 CONTACT RESISTANCE:
      2.5.1 CENTER CONTACT: 4 MILLIOHM MAX
      2.5.2 OUTER CONTACT: 2.5 MILLIOHM MAX
   2.6 INSULATION RESISTANCE: 5000 MOHM MIN

3. MECHANICAL:
   3.1 ENGAGEMENT/ DISENGAGEMENT FORCE: 0.23 NM MAX
   3.2 DURABILITY: 500 CYCLES MIN

4. ENVIRONMENT:
   4.1 THERMAL SHOCK: MIL-STD-202, METHOD 107, CONDITION B.
   4.2 OPERATING TEMPERATURE: -65 TO 165°C
   4.3 SHOCK: MIL-STD-202, METHOD 213, CONDITION I
   4.4 VIBRATION: MIL-STD-202, METHOD 204, CONDITION D
   4.5 MOISTURE RESISTANCE: MIL-STD-202, METHOD 106

cinch connectivity solutions

This PROPRIETARY Document is the property of Johnson Electronics. It is confidential in nature and may not be reproduced without the prior written consent of Johnson Electronics. Copies shall be returned to Johnson Electronics upon demand.

INTERPRET DRAWING IN ACCORDANCE WITH ASME Y14.5-2009

Model No. 147-0901-901

RoHS2 ☑ 2011/65/EU

VENDOR CODE STAMPED (NOTE 1)

.XXX ± .02
.XXXX ± .01
ANGLES ±5°

Cage Code

3RD ANGLE PROJECTION

Drawn by: Betty.Yu

Date: 08/21/2018

Johnson

Title: ADAPTER ASSEMBLY, R/A JACK TO JACK,2.4mm

Drawing No. 147-0901-901

Rev. 002

Size C

DO NOT SCALE DRAWING

Workmanship Std NONE

Sheet 1 of 1