TOP VIEW

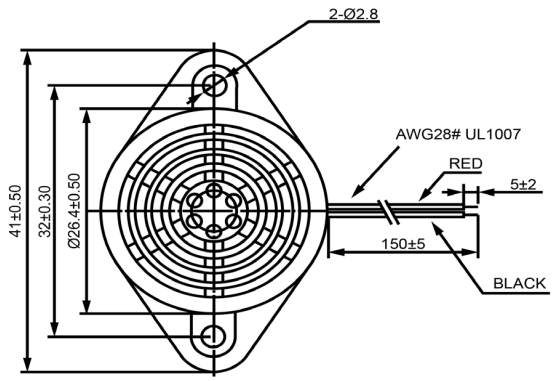

SIDE VIEW

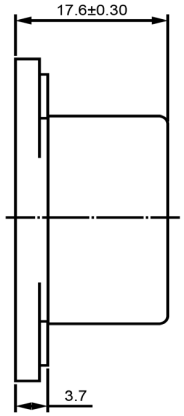

Specifications

Description	Value	Unit
Technology	Electro-Mechanical	
Resonant Frequency	400	(Hz)
Rated Voltage	6	(V)
SPL @ 10cm	95	(dBA)
Tone	Single	
Mount Type	Flange Mount	
Voltage Range	4 ~ 8	(V)
Max Rated Current	33	(mA)
Housing Material	ABS	
Operating Temperature	-20 ~ +60	°C
Storage Temperature	-30 ~ +70	°C
Weight	17	(g)

Notes

1) All dimensions are in mm unless otherwise noted
2) All parts meet RoHS

Revision History

Version	Description	Date	Approved
1	Released from Engineering	10/21/2013	J.S

Drawn by	Date	Checked by	Date	Approved by	Date
A.B.	10/21/2013	C.E.	10/21/2013	J.S	10/21/2013

DB UNLIMITED

Electro-Mechanical Indicator

IE260406-3

Additional considerations can be found at www.dbunlimitedco.com/technical-articles.

©2013, DB Unlimited