Alle Rechte vorbehalten/ *All rights reserved*

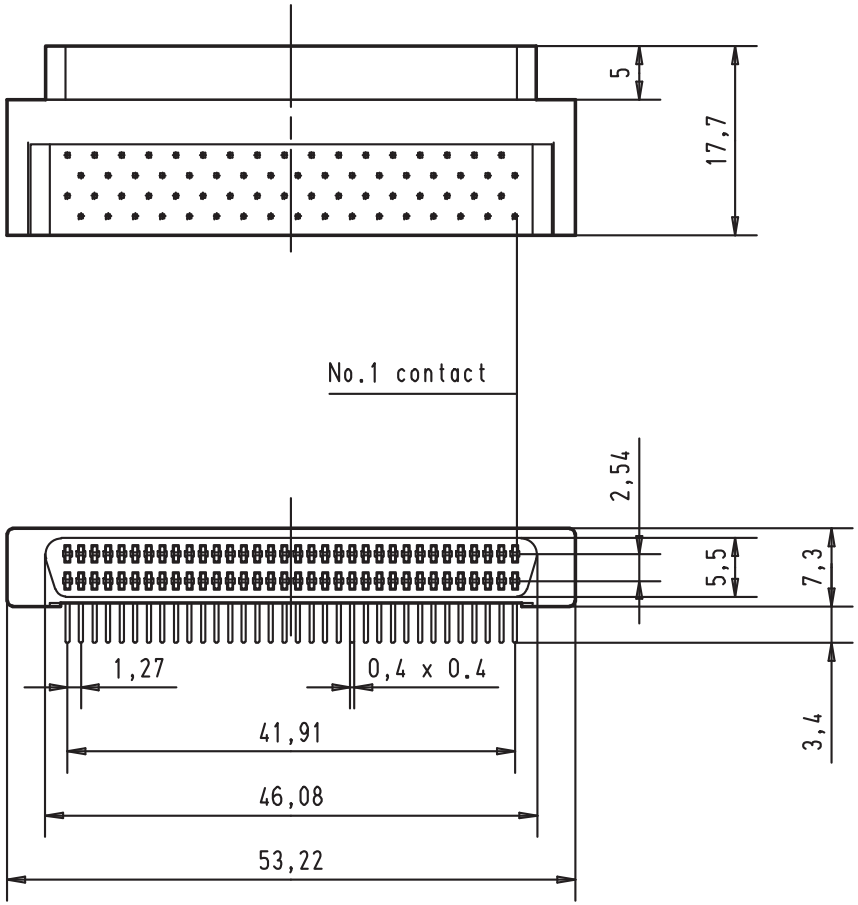

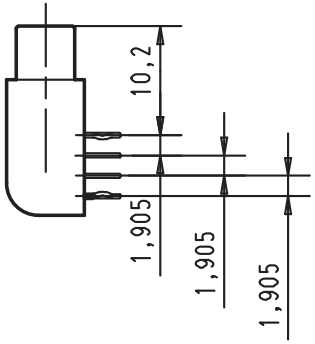

Printed Board Layout
component side

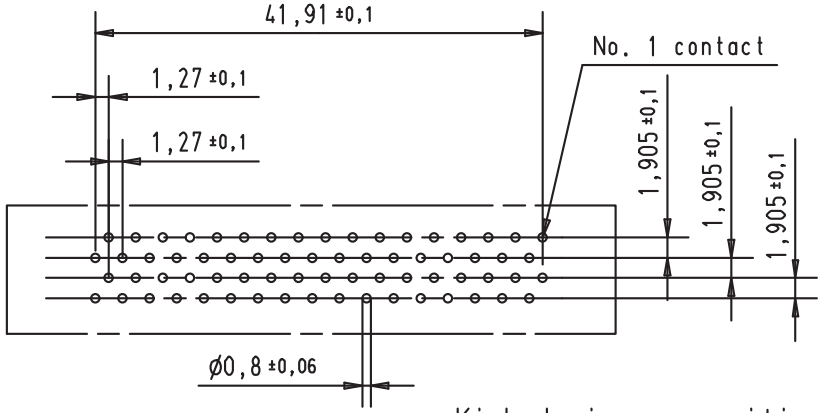

Kinked pins on positions
36-38 and 66-68

				Dat.	Name		har.mik® I/O pin/socket board to board 68 poles female connector kinked with angled solder pins	Maßstab/ Scale
			Detail.	30-AUG-00	Alspace	All Dim. in mm Orig. Size DIN A 4		1,5:1
			Insp.					
			Stand.					
27941	30-AUG-00	Alspace	HARTING EURL F-95972 Paris				TB 60 05 068 5143	Blatt/Page 1/1
Mod.	Dat.	Name					Sub.	