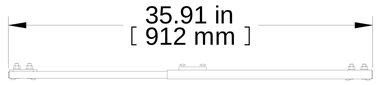

TOP VIEW

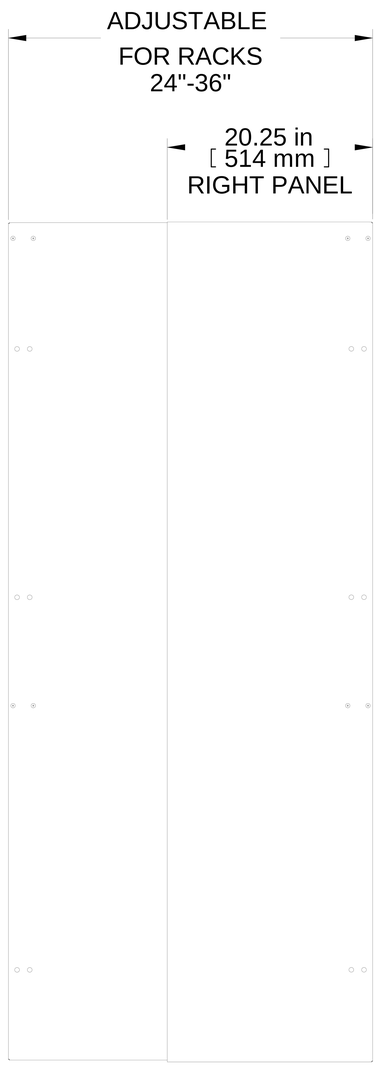

FRONT VIEW

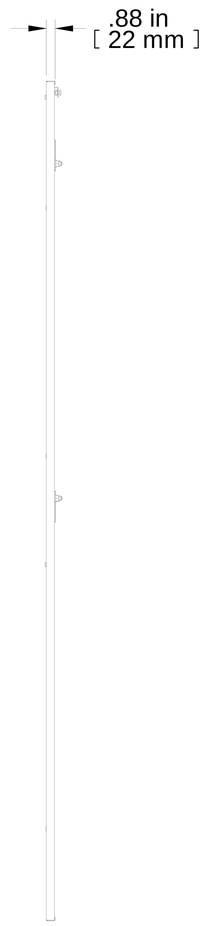

R.S. VIEW

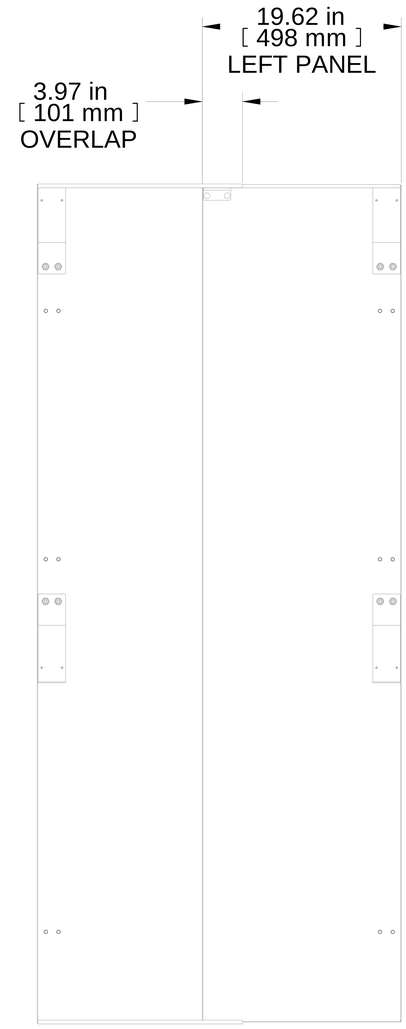

REAR VIEW

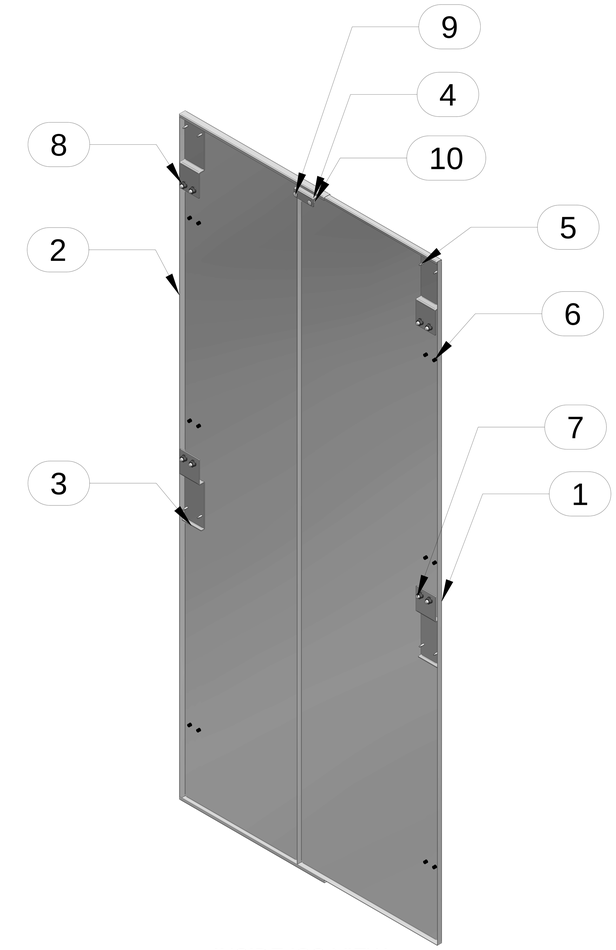

INSIDE ISO VIEW

Item Number	Title	Quantity
1	DC4R ADJ. SIDE PANEL L.S. 44U X 36	1
2	DC4R ADJ. SIDE PANEL R.S. 44U X 36	1
3	DC4R ADJ. SIDE PANEL 44U MOUNTING	4
4	DC4R ADJ. SIDE PANEL CENTER	1
5	SCREW 10-32 X .75" DGP W/WASHER	8
6	PLUG - 0.4" DIA. HOLE	12
7	SCREW 3/8-16X3/4 CAP ZP GR 2	8
8	NUT 3/8-16 KEP	8
9	SCREW 1/4-20 X 1/2 CARR. BOLT	2
10	NUT 1/4-20 KEP	2

PART NUMBERS

DC4R4436SP	PAINTED BLACK TEXTURED

NOTES

Adjustable Side Panel for DC4R Series (44U)
Mounting Hardware Included
See Hammond Website for More Information

Français

Pour tous les détails sur nos produits,
svp veuillez consulter notre site www.hammondmfg.com

Data subject to change without notice. Isometric drawing not to scale.
Les données sont sujettes à changement sans préavis.

HAMMOND MANUFACTURING®

www.hammondmfg.com

PART NO. **DC4R4436SP**