THIS DRAWING IS UNPUBLISHED. RELEASED FOR PUBLICATION 20
© COPYRIGHT 20 BY - ALL RIGHTS RESERVED.

REVISIONS

P	LTR	DESCRIPTION	DATE	DWN	APVD
	H	REVISED PER ECR-14-016951	11FEB2015	I.T	W.H

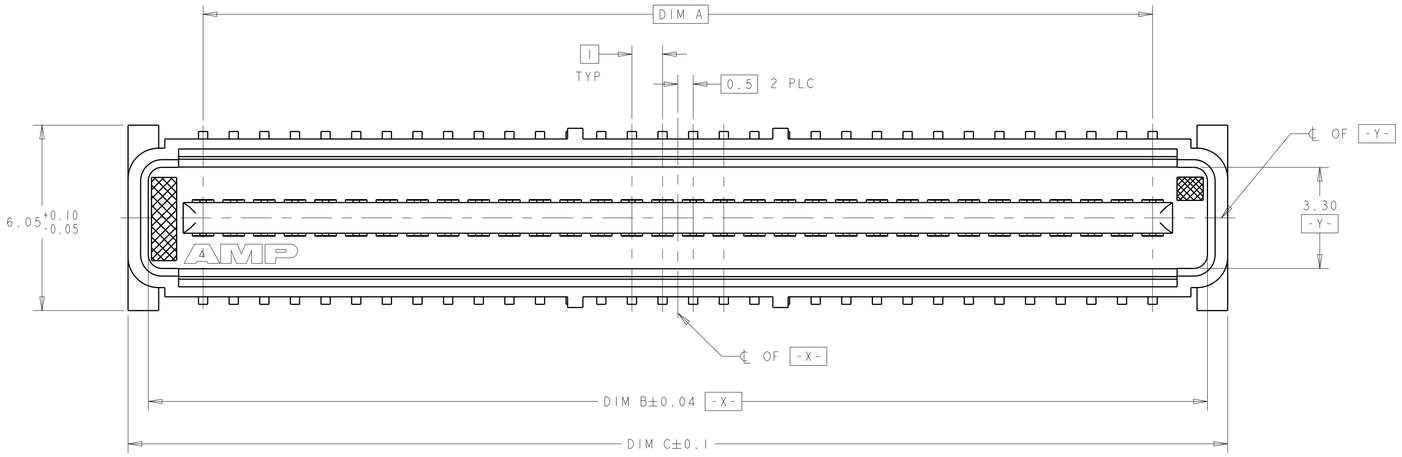

1. HOUSING MATERIAL: LIQUID CRYSTAL POLYMER COLOR: BLACK.
   CONTACT MATERIAL: PHOSPHOR BRONZE.
2. CONTACT FINISH: NICKEL UNDERPLATE ALL OVER, MATING SURFACES PLATED TO MEET PLI PERFORMANCE REQUIREMENTS OF INDUSTRY SPECIFICATION EIA-700AAAB, SOLDER TAILS PLATED TIN-LEAD.
3. DATUM LOCATIONS AND BASIC DIMENSIONS TO BE ESTABLISHED BY THE CUSTOMER. CONSULT AMP ENGINEERING WHEN PLACING MULTIPLE CONNECTORS ON A PC BOARD.
4. PACKAGED IN TAPE ON REEL PER EIA-481.
5. VACUUM COVER DESIGNED FOR 4mm DIA. NOZZLE. VACUUM COVER TO BE REMOVED AFTER SOLDERING. VACUUM COVER REMOVED FROM SOME VIEWS FOR DIMENSIONAL CLARITY.
6. SHORTER SOLDER LANDS MAY BE USED PER EIA 700AAAB, HOWEVER 2.7 LENGTH ASSURES OPTIMUM SOLDER FILLET REGARDLESS OF MANUFACTURER OF CONNECTOR.
7. REFERRED TO AS DIM N IN EIA 700AAAB SPECIFICATION.
8. 5.5 MIN DIAMETER TARGET AREA FOR VACUUM PICK-UP.
9. CONTACT FINISH: 0.002 MINIMUM BRIGHT TIN-LEAD (93-7) ON SOLDER AREA, 0.00127 MINIMUM GOLD ON MATING AREA, BOTH OVER 0.00127 MINIMUM NICKEL ON ENTIRE CONTACT.

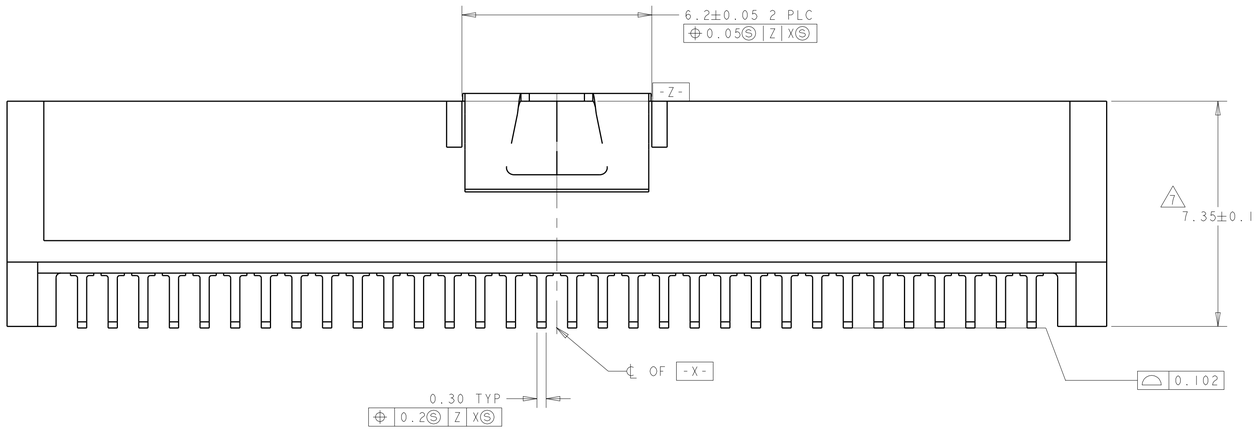

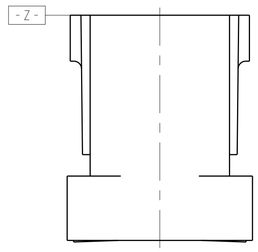

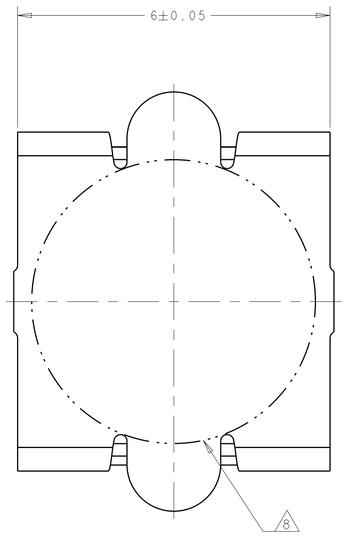

VACUUM COVER

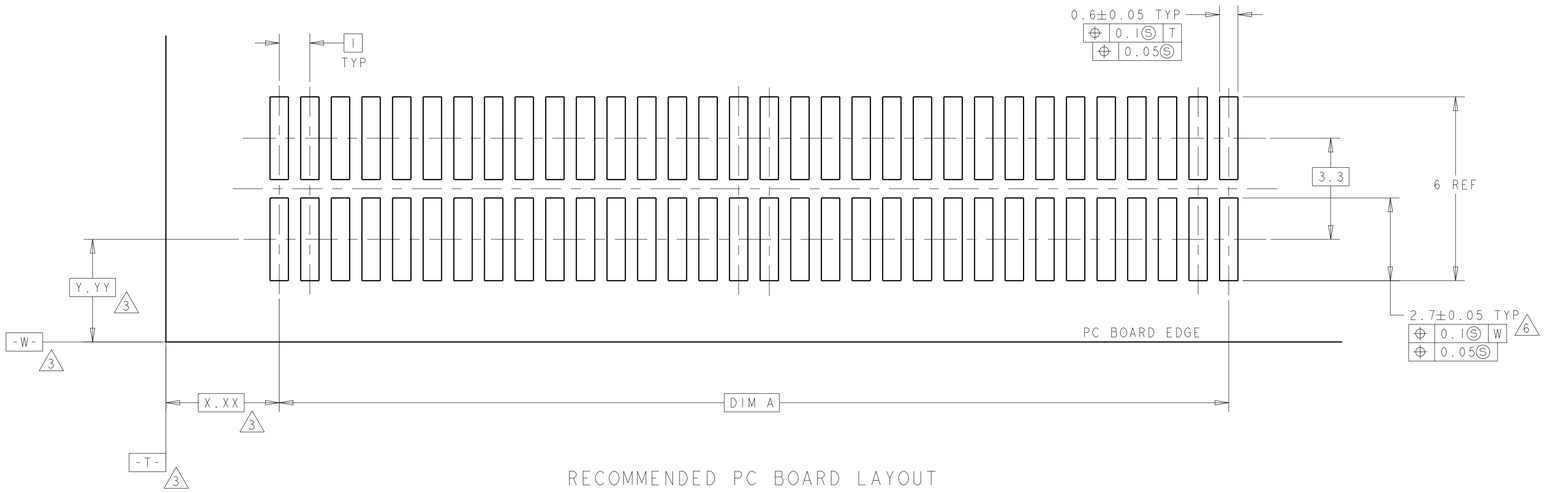

RECOMMENDED PC BOARD LAYOUT

FINISH	DIM C	DIM B	DIM A	MATING CONNECTOR	STACK HGTS	POS	PART NO
9	45.9	44.58	41	120531-2	14	84	1-120533-2
9	45.9	44.58	41	120529-2	11	84	1-120533-2
9	45.9	44.58	41	120528-2	9	84	1-120533-2
9	35.9	34.58	31	120531-1	14	64	1-120533-1
9	35.9	34.58	31	120529-1	11	64	1-120533-1
9	35.9	34.58	31	120528-1	9	64	1-120533-1
2	45.9	44.58	41	120531-2	14	84	120533-2
2	45.9	44.58	41	120529-2	11	84	120533-2
2	45.9	44.58	41	120528-2	9	84	120533-2
2	35.9	34.58	31	120531-1	14	64	120533-1
2	35.9	34.58	31	120529-1	11	64	120533-1
2	35.9	34.58	31	120528-1	9	64	120533-1

THIS DRAWING IS A CONTROLLED DOCUMENT.

DIMENSIONS: mm

TOLERANCES UNLESS OTHERWISE SPECIFIED:
0 PLC ±-
1 PLC ±-
2 PLC ±0.03
3 PLC ±0.003
4 PLC ±-
ANGLES ±0°30'

MATERIAL 1

FINISH - SEE TABLE

DWN J.REED 2/19/97
CHK L.VO 2/19/97
APVD - -
PRODUCT SPEC 502-1079
APPLICATION SPEC 114-25045
WEIGHT -

CUSTOMER DRAWING

TE Connectivity

NAME -
PLUG ASSY, W/COVER
1.0mm FH(IEEE) CONNECTOR

SIZE	CAGE CODE	DRAWING NO	RESTRICTED TO
A1	-	C-120533	-

SCALE 17:1 SHEET 1 OF 1 REV H

4805 (3/13)