THIS IS ISSUED IN STRICT CONFIDENCE ON CONDITION THAT IT IS NOT USED AS A BASIS FOR MANUFACTURE OR SALE, AND THAT IT IS NOT COPIED, REPRINTED OR DISCLOSED TO A THIRD PARTY EITHER WHOLLY OR IN PART WITHOUT THE PRIOR WRITTEN CONSENT OF ITT CANNON.

DWG NO.	SH	REV
028029Y0103	1	-

REV	DCR	DESCRIPTION	DATE	APPROVAL
-		INITIAL DRAWING RELEASE		

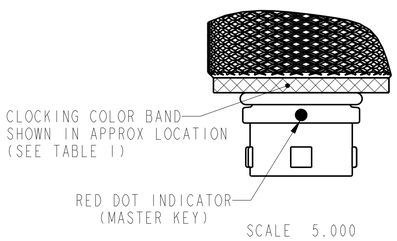

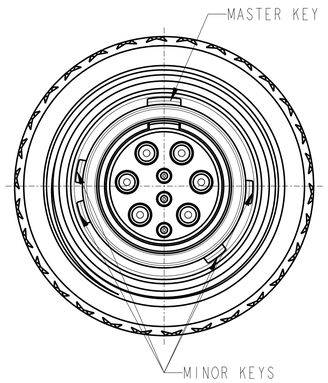

2 0-09 ARR
FRONT VIEW SHOWN

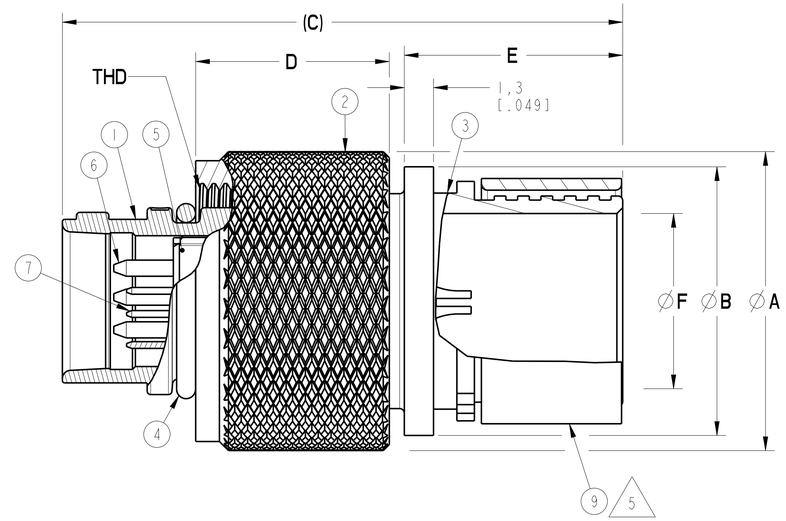

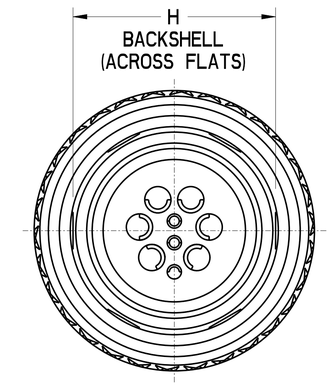

2 0-09 ARR REAR VIEW SHOWN

TABLE I - CLOCKING ARR.

CLOCKING	COLOR BAND
A	BROWN
B	RED
C	BLUE
D	GREEN

TABLE II - LAYOUT & DIMENSIONS

SIZE - LAYOUT	CONTACT DIA.	ØA	ØB	C	D	E	ØF MAX CABLE	H	THD
0-09	M - MULTI	12,8 [.504]	11,5 [.453]	24 [.945]	8,3 [.327]	9,4 [.37]	6,5 [.256]	9,5 [.374]	M10 X 0,5
0-12	M - MULTI								
0-16	B - 0,3 mm								
1-20	M - MULTI	15,2 [.598]	13,9 [.547]	25 [.984]	8.4 [.331]	9.8 [.385]	8.0 [.315]	11.5 [.453]	M12 X 0,5
1-27	B - 0,3mm								

TABLE III - MATERIALS AND PLATINGS

ITEM NUMBER	COMPONENT	MATERIAL	PLATING
1	PLUG BARREL	M- BRASS / RUTHENIUM OVER ELECTROLESS NICKEL (ROH)	
2	COUPLING NUT		
3	BACKSHELL	BRASS / ELECTROLESS NICKEL	
4	O-RING	FLUOROSILICONE	N/A
5	INSULATOR	POLYETHERIMIDE, GF	N/A
6	POWER CONTACTS	COPPER ALLOY	GOLD OVER NICKEL
7	SIGNAL CONTACTS	COPPER ALLOY	GOLD OVER NICKEL
8 (NOT SHOWN)	INTERNAL SPRING	STAINLESS STEEL	N/A
9	CRIMP SLEEVE	COPPER ALLOY	ELECTROLESS NICKEL

EXPLANATION OF PART NUMBER

HDX - W C 1 M 0-09 X M A

- FAMILY: HDX
- SERIES (HIGH DENSITY): W
- TYPE (PLUG W/ LOCKNUT): C
- STYLE (IN-LINE): 1
- MATERIAL AND FINISH (SEE TABLE III): M
- CONNECTOR SIZE AND LAYOUT (SEE TABLE II): 0-09
- CONTACT TYPE (X=PIN SOLDER CUP): X
- CONTACT DIAMETER (SEE TABLE II): M
- SHELL POLARIZATION (SEE TABLE I): A

PERFORMANCE PROPERTIES

POWER CONTACTS, 0,7mm	AWG 22 CURRENT RATING 5A (SINGLE CONTACT)
SIGNAL CONTACTS, 0,3mm	AWG 28 CURRENT RATING 1A (SINGLE CONTACT)
INSULATION RESISTANCE	100 MΩ MINIMUM
DWV	NO BREAKDOWN AT OR BELOW 1000 VDC
RATED VOLTAGE	250V
OPERATING TEMPERATURE	-51 °C TO +125 °C
WATER TIGHTNESS	20m DEPTH FOR 120 MIN (IPX8) PER MIL-STD-810G METHOD 512.5, PROCEDURE I TIGHTNESS TO IPX9K PER ISO 20653 2013-02-15
VIBRATION	15g (SINE), 10-2,000HZ, NO DISCONTINUITY> 1µs EIA-364-28F
SHOCK	50g AMPLITUDE, 1/2 SINE PULSE OF 6ms, NO DISCONTINUITY>1µs EIA-364-27C
MECHANICAL DURABILITY	5,000 MATING CYCLES

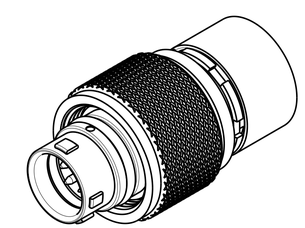

SCALE 4.000

NOTES: UNLESS OTHERWISE SPECIFIED.

1. ALL DIMENSIONS SHOWN ARE IN METRIC, MM. [INCH] DIMENSIONS ARE FOR REFERENCE ONLY.
2. FOR ADDITIIONAL CAVITY LAYOUT INFORMATION, REF CSA-HDX.
3. RECOMMENDED TORQUE FOR BACKSHELL:
   (APPLICATION OF THREADLOCKER TO BACKSHELL THREADS IS RECOMMENDED.)
   SIZE 0 -0.5Nm [4.4in-lbs]
   SIZE 1 - 1Nm [8.8 in-lbs]

NOTES CONT'D:

4. RECOMMENDED CRIMP DIE M22520/5-23. (FOR SIZE 0)
   RECOMMENDED CRIMP DIE M22520/5-21. (FOR SIZE 1)
   HAND CRIMP TOOL M22520/5-01.
5. CRIMP SLEEVE TO BE SHIPPED LOOSE.
6. CONSULT FACTORY FOR TOOLS AND/OR TERMINATION PROCESS.

RoHS COMPLIANCE CODE

NTC - not RoHS compliant
ROC - RoHS not hi-temp
ROH - RoHS & hi-temp (260°C)
NOTE - REFER TO TABLE/NOTES

NOTE

ITT Cannon LLC
56 Technology Drive, IRVINE, CA 92618

UNLESS OTHERWISE SPECIFIED: METRIC
-DEFAULT ANGLE TOLERANCE IS ±1°
-DEFAULT LENGTH TOLERANCE IS ± 0.13 MM [.005] IN.
-REMOVE ALL BURRS AND SHARP EDGES 0.13 [.005] MAX.
-SURFACE FINISH SHALL BE 1.6 uM [63 uIN] RMS MAX.

WEIGHT		CRITICAL DIM	0
DENSITY		SPC DIM	0
VOLUME		KEY CHARACTERISTIC	0
SURFACE AREA			
REF			
PART NO	VARIOUS		
DRAWN C. HA	DATE 02/18/22		
CHECKED A. ABLOTT	DATE 04/01/22		
APPROVED S. VILLARRUEL	DATE 04/01/22		

UNLESS OTHERWISE SPECIFIED: METRIC
-DIMENSIONS ARE IN MM'S AND [INCHES].
-DIMENSIONAL LIMITS APPLY BEFORE PLATING.
-DIM'S AND TOL'S ARE PER ASME Y14.5M-1994.
-DO NOT SCALE DRAWING.

SCALE 8.000
CAGE CODE 71468

DESCRIPTION: CONNECTOR, PLUG, ELECTRICAL HDx, INLINE LOCKING BREAKAWAY PIN CONTACTS, MASTER DWG

3RD ANGLE PROJECTION | SIZE D | USE C | SHEET 1 / 1 | 028029Y0103 | REV -

DWG FILE NAME: 028029Y0103-CU

EXPORT CODE C
COMMERCIAL. RESTRICTED TO EMBARGOED COUNTRIES AND DENIED PARTIES.
PRINTED COPIES ARE NOT MAINTAINED TO LATEST REVISION.