19084

MATERIAL NO.	ENG. NO.	STUD SIZE	"S"±.003	MATERIAL	PLATING
190840001	SRZ-0129-06	6	.146/3.71	BRASS	NONE
190840002	SRZ-0129-08	8	.173/4.39		
190840003	SRZ-0129-10	10	.198/5.03		
190840004	SRZ-4129-06	6	.146/3.71	BRASS	TIN
190840005	SRZ-4129-08	8	.173/4.39		
190840006	SRZ-4129-10	10	.198/5.03		
190840007	SRZ-S-4129-06	6	.146/3.71	STEEL	
190840008	SRZ-S-4129-08	8	.173/4.39		
190840009	SRZ-S-4129-10	10	.198/5.03		

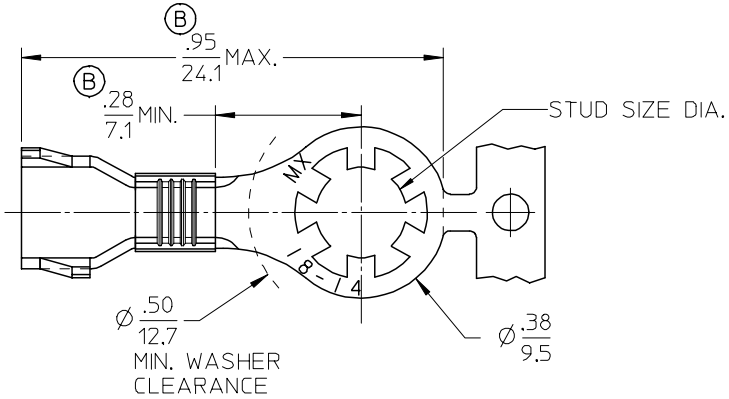

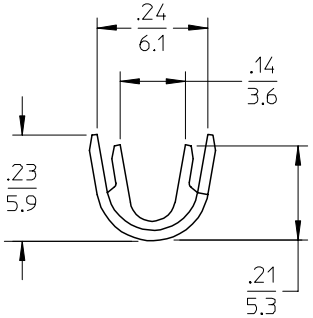

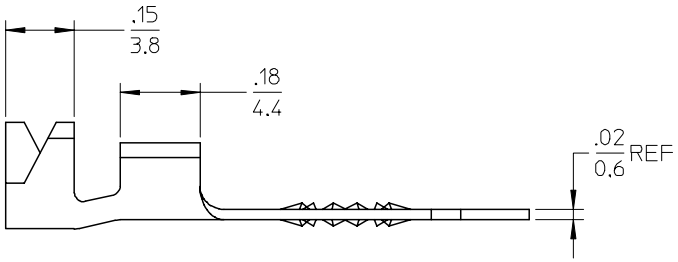

SALES DRAWING

NOTE(S):
1. WIRE: SIZE: 18-14 AWG
0.7 - 2.6 MM^2

UPDATE TO MX STDS
EC NO: ETC2001-0128
DRWN:DMYRICK 2005/02/18
CH'KD:JPAWLICKI 2005/02/18
APPR: JPAWLICK 2005/02/18
REV B
DESCRIPTION

QUALITY SYMBOLS
▼=0
C=0

GENERAL TOLERANCES (UNLESS SPECIFIED)

	mm	INCH
4 PLACES	± ---	± ---
3 PLACES	± ---	±.005
2 PLACES	±0.13	±.01
1 PLACE	±0.25	± ---

ANGULAR ±1/2°

DRAFT WHERE APPLICABLE MUST REMAIN WITHIN DIMENSIONS

DIMENSION STYLE: IN/MM
SCALE
DESIGN UNITS: INCH
THIRD ANGLE PROJECTION

DRAWN BY	JHACKNEY	DATE 1995/05/05
CHECKED BY	RDEROSS	DATE 1995/05/05
APPROVED BY	RDEROSS	DATE 1995/05/05

TITLE: OPEN BARREL STRIP STAR RING, VIBRAKRIMP 18-14 AWG

molex MOLEX INCORPORATED

MATERIAL NO.: SEE CHART
DOCUMENT NO.: SD-19084-001
SHEET NO.: 1 OF 1
SIZE: B

THIS DRAWING CONTAINS INFORMATION THAT IS PROPRIETARY TO MOLEX INCORPORATED AND SHOULD NOT BE USED WITHOUT WRITTEN PERMISSION

tb_frame_B_P_AM_T
Rev. D 2004/06/28