May.1.2017 Copyright 2017 HIROSE ELECTRIC CO., LTD. All Rights Reserved.

RECOMMENDED PC BOARD PATTERN

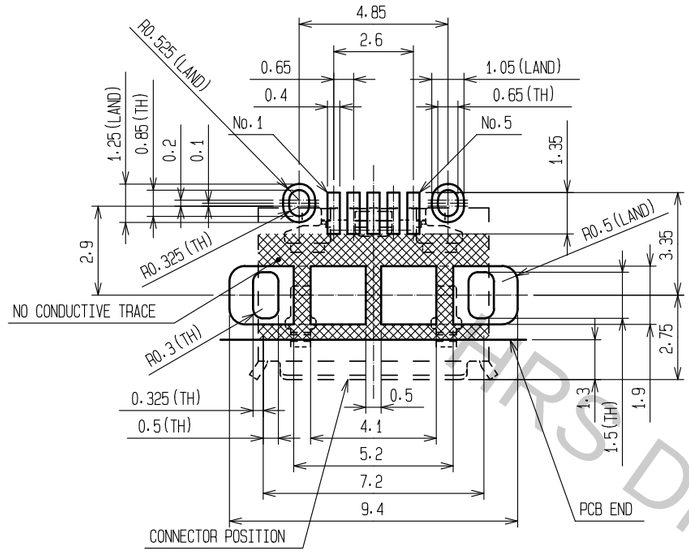

GENERAL TOLERANCE IS ±0.05mm

RECOMMENDED PANEL CUTOUT(4:1)

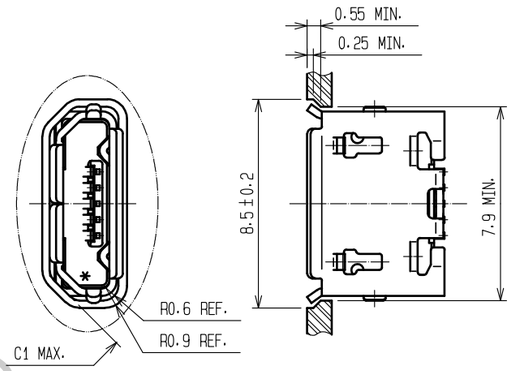

MATED WITH CORRESPONDING PLUG(4:1)

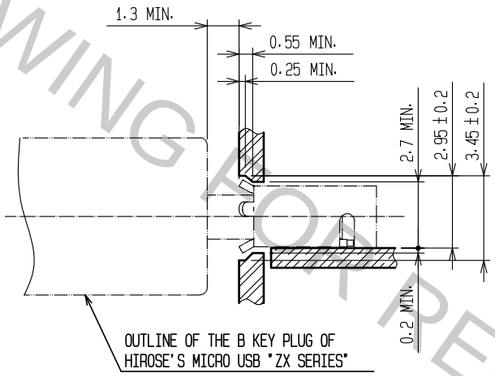

3 DRAWING FOR PACKING(FREE)

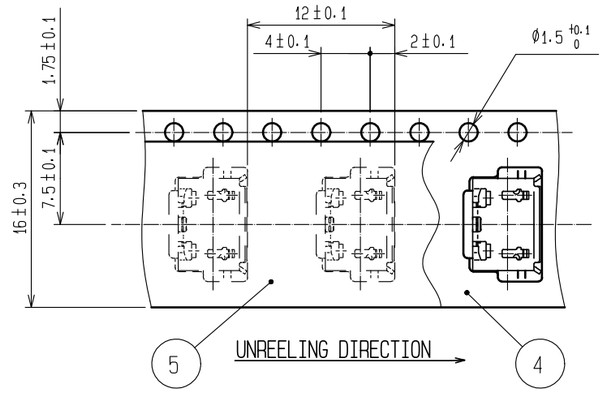

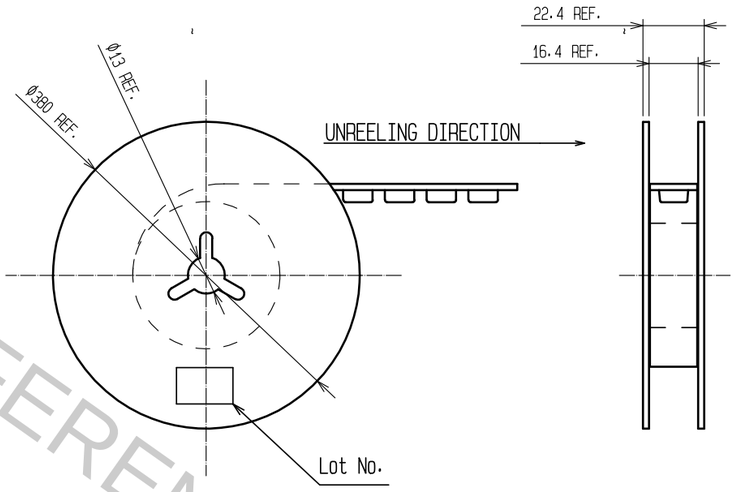

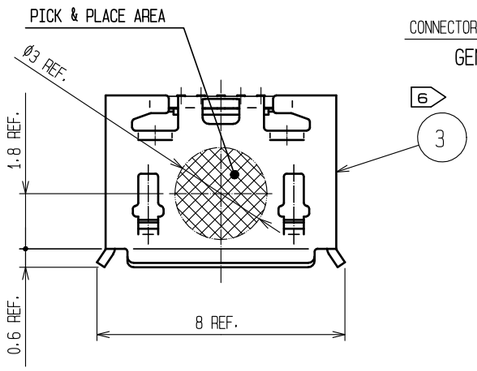

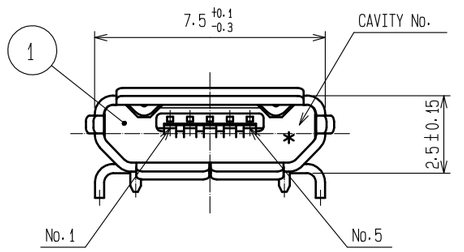

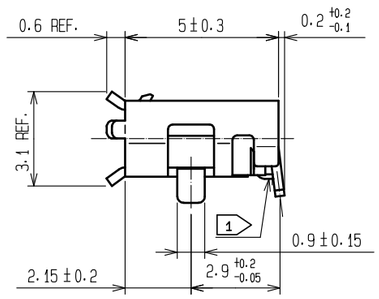

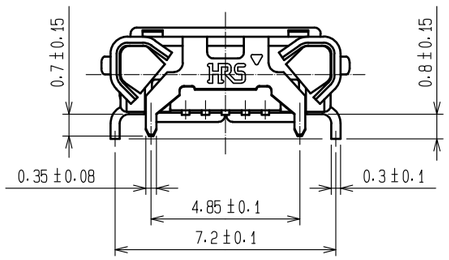

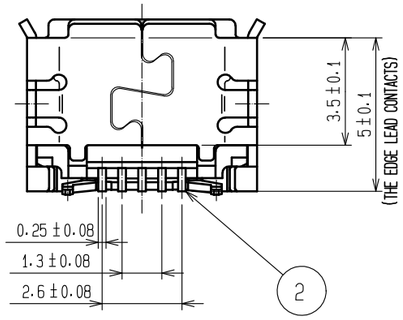

NOTES.
1. CO-PLANARITY IS WITHIN 0.08mm MAX.
2. PLATING
   CONTACT AREA :GOLD 0.75μm MIN.
   LEAD AREA :GOLD 0.05μm MIN.
   UNDER PLATING:NICKEL 2μm MIN.
3. PER REEL : 2000 pcs.
4. INTERFACE DIMENSIONS TO USB2.0 SPECIFICATION.
5. AS FOR PART No.3, THE PERFORMANCE REMAINS GOOD EVEN IF THERE IS A RUBBING WOUND BY THE ASSEMBLY PROCESS.
6. AS FOR PART No.3, THERE IS NO PROBLEM ON THE QUALITY THOUGH THERE MIGHT BE A DIFFERENCE IN THE COLOR DEPENDING ON THE PLATING PROCESSING LOT.

NO.	MATERIAL	FINISH , REMARKS	NO.	MATERIAL	FINISH , REMARKS
			5	PE	
2	COPPER ALLOY		4	PS	
1	LCP	BLACK UL94V-0	3	STAINLESS STEEL	TIN PLATING 1μm MIN. LUBRICANT

UNITS	SCALE	COUNT	DESCRIPTION OF REVISIONS	DESIGNED	CHECKED	DATE
mm	5 : 1	0				

HIROSE ELECTRIC CO., LTD.

APPROVED	: NM. NISHIMATSU	15. 10. 27	DRAWING NO.	EDC-126367-30-00
CHECKED	: KN. ICHIKAWA	15. 10. 27	PART NO.	ZX62D-B-5P8(30)
DESIGNED	: TS. ITO	15. 10. 27	CODE NO.	CL242-0034-0-30
DRAWN	: AK. AKIYAMA	15. 10. 27		0 1/1

HRS DRAWING FOR REFERENCE