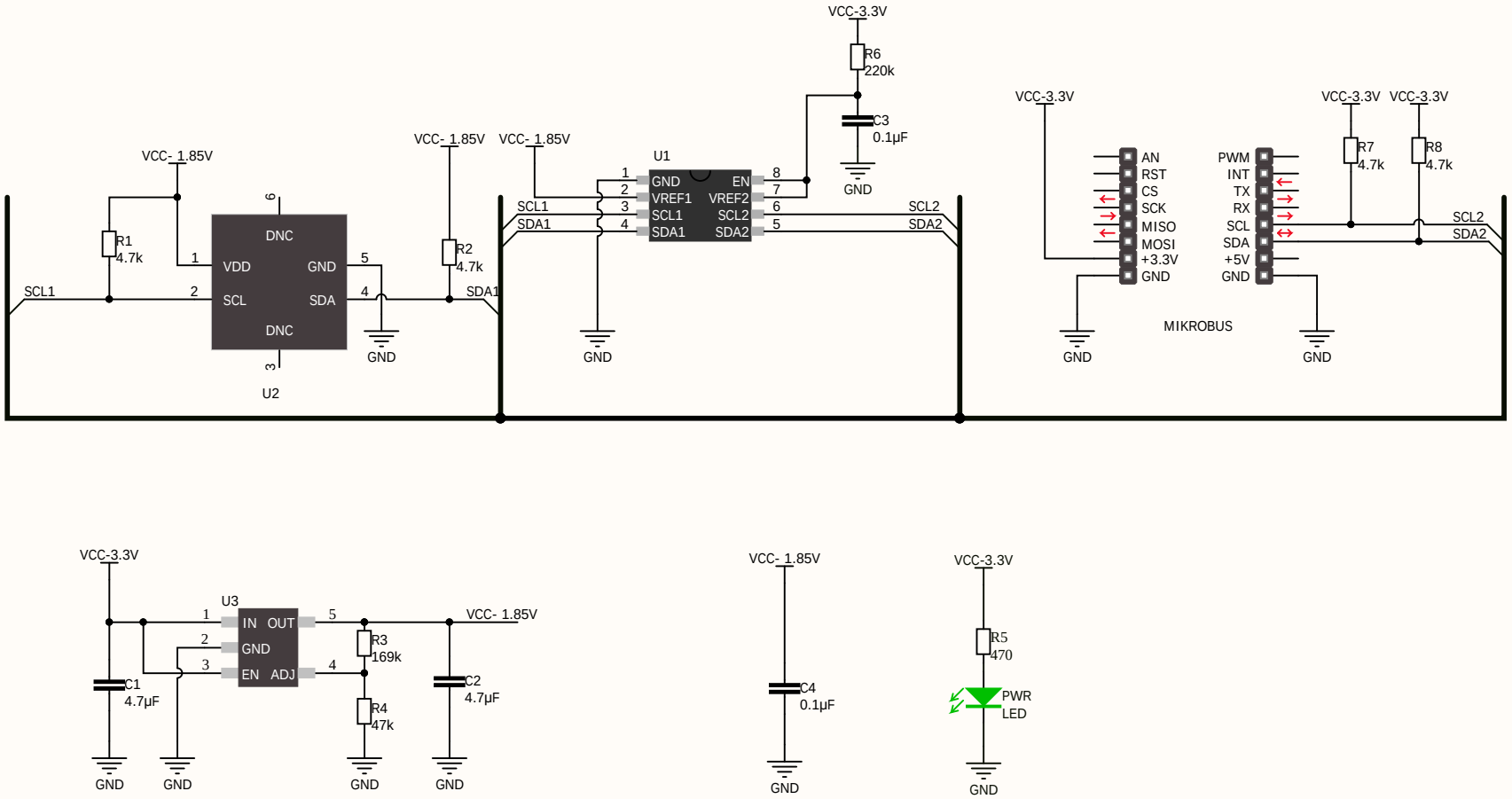

Jumper Table		
Dsg	Name	Description

ProjectName:	Temp&Hum 2 Click_v100.PrjPcb		
Design Engineer: *	Revision: *	Size: A4	
Date: 8/14/2020	Time: 2:55:34 PM	Sheet * of *	
Git:	http://gitlab/click-boards/Shuttle_Click.git		