THIS DRAWING IS UNPUBLISHED. RELEASED FOR PUBLICATION -,- .
© COPYRIGHT - By - ALL RIGHTS RESERVED.

LOC	DIST
AF	50

REVISIONS

P	LTR	DESCRIPTION	DATE	DWN	APVD
	E1	ECR-13-017177	05NOV13	PKS	RRP

1 CONTINUOUS STRIP ON REELS WITH TERMINALS LOCATED ON 6.00±0.08 [.236±.003] CENTERS.

2 SLOT TERMINATES EITHER A SINGLE OR DOUBLE MAGNET WIRE OF THE SAME TYPE AND SIZE, COPPER 0.23mm [#31] AWG.

3 AFTER INSERTION INTO PLASTIC HOLDER, TAB PORTION MUST BE BENT OVER 45° TO 90° OR POTTED-IN TO PREVENT PULL-OUT WHEN MATING RECEPTACLE IS DISCONNECTED.

4 POINT OF MEASUREMENT LOCATED APPROXIMATELY AS SHOWN

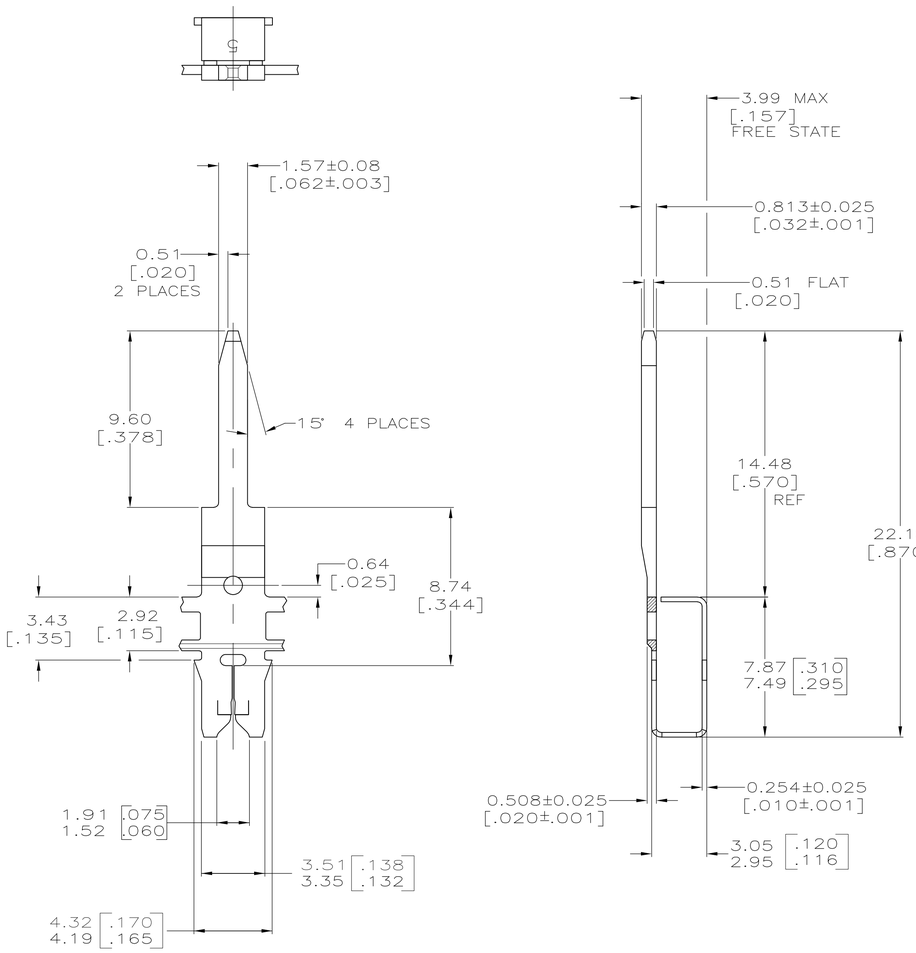

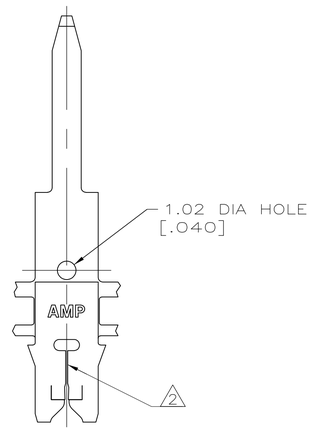

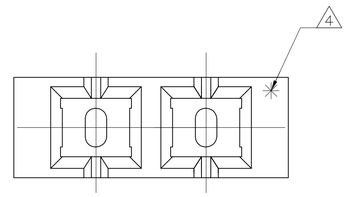

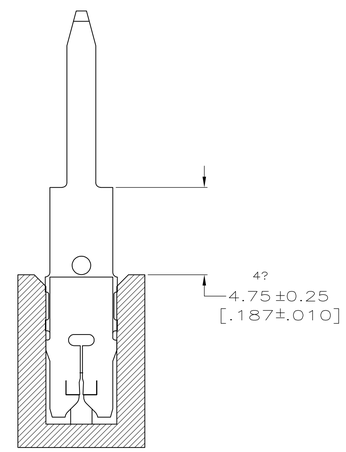

INSERTION SPECIFICATION

63810-1

PART NO.

THIS DRAWING IS A CONTROLLED DOCUMENT.

DIMENSIONS: INCHES

TOLERANCES UNLESS OTHERWISE SPECIFIED:
0 PLC ± -
1 PLC ± -
2 PLC ± 0.15[.006]
3 PLC ± -
4 PLC ± -
ANGLES ± -

MATERIAL: BRASS

FINISH: TIN PLATED

DWN R.GRZYBOWSKI 2/JAN/95
CHK M.S.FEHER 2/JAN/95
APVD N. E. NEFF 2/JAN/95

PRODUCT SPEC 108-2012
APPLICATION SPEC 114-2046
WEIGHT -

TE Connectivity

NAME: TAB, 1.57[.062], 300 SRS MAG-MATE -

SIZE	CAGE CODE	DRAWING NO	RESTRICTED TO
A1	00779	C-63810	-

CUSTOMER DRAWING

SCALE	SHEET	OF	REV
6:1	1	1	E1