THIS DRAWING IS UNPUBLISHED. RELEASED FOR PUBLICATION -,- .
© COPYRIGHT - BY TE CONNECTIVITY CORPORATION. ALL RIGHTS RESERVED.

LOC	DIST
AA	22

REVISIONS

P	LTR	DESCRIPTION	DATE	DWN	APVD
	B	REV PER ECO-09-000306	10DEC2008	VL	LR
	C	ECO-11-015766	30MAY2011	EL	LR

MECHANICAL:

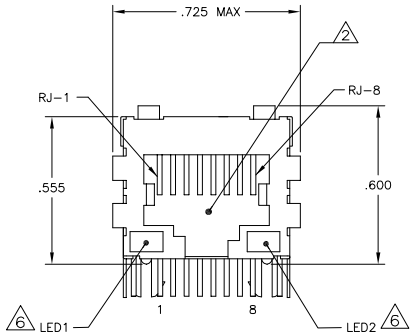

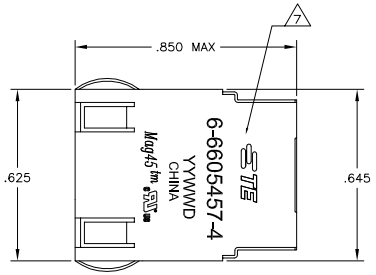

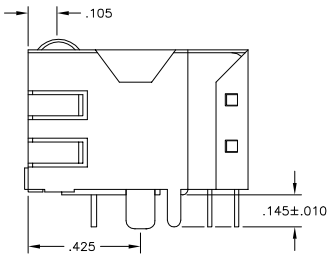

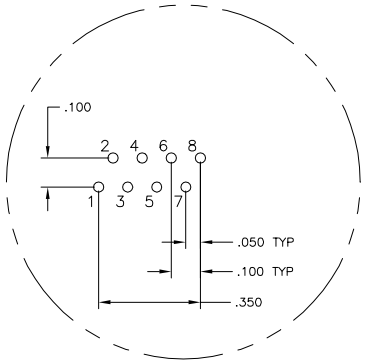

Pin Designations

1. MATERIALS:
HOUSING - THERMOPLASTIC PET POLYESTER FLAMMABILITY RATING UL 94V-0.
SHIELD - .010" THICK, C26800 BRASS PREPLATED WITH 30µINCH MIN SEMI-BRIGHT NICKEL. SOLDER TABS POST DIPPED WITH 100µINCH MIN SAC SOLDER.
MOD JACK CONTACTS - 0.0157 X 0.018" PHOSPHOR BRONZE, 50µINCH MIN OVERALL NICKEL UNDERPLATE WITH SELECT 50µINCH MIN HARD GOLD FINISH PLATE.
SOLDERTAILS WITH 100µINCH MIN MATTE TIN AND/OR SAC SOLDER DIP.
LIGHT EMITTING DIODE(LED) - DIFFUSED EPOXY LENS, .020" X .020" CARBON STEEL WIREFRAME LEADS PRE-PLATED WITH 80µINCH SILVER OVER 40µINCH NICKEL UNDERPLATE OVER 40µINCH COPPER UNDERPLATE. POST-PLATED WITH 100µINCH MIN MATTE TIN AND/OR SAC SOLDER DIP OR PURE TIN SOLDER DIP.

2. RJ45 JACK CAVITY CONFORMS TO FCC RULES AND REGULATIONS PART 68, SUB PART F.

3. MAGNETICS
-IMPEDANCE: 100 OHMS
-TURNS RATIO (CHIP:CABLE): TX = 1:1, RX = 1:1
-OPEN CIRCUIT INDUCTANCE (OCL): 350µH MIN @100kHz, 0.1VRMS, 8mADC BIAS FROM -40°C TO +85°C, TX AND RX
-PERFORMANCE @ 25°C:
INSERTION LOSS (IL): 1.1dB MAX FROM 0.5MHz TO 100MHz
RETURN LOSS (RL): 18dB MIN FROM 0.5MHZ TO 30MHz
18-20LOG(f/30)dB MIN FROM 30.1MHz TO 60MHz
12dB MIN FROM 60.1MHz TO 80MHz
CROSSTALK ATTENUATION: 35dB MIN FROM 0.5MHz TO 40MHz
33-20*LOG(f/50)dB MIN FROM 40.1MHz TO 100MHz
COMMON MODE REJECTION RATIO (CMRR): 30dB MIN FROM 0.5MHz TO 100MHz
-ISOLATION VOLTAGE:2250VDC (MAX) FOR 60 SECONDS WITH A RISE TIME OF 500V/SEC.

4. OPERATING TEMPERATURE: FROM -40° TO +85°C.

5. INDICATED CONNECTIONS ARE FOR NIC CONFIGURATION. THE MAGNETICS ARE SYMMETRIC, AND SUPPORT AUTO-MDI/MDIX.

6. LEDS ARE DRIVEN WITH CONSTANT CURRENT AT APPROX 20 mA
LED COLOR: DOMINANT WAVELENGTH (λD): GREEN 568 nm TYP @ IF=20 mA
FORWARD VOLTAGE (VF): GREEN 2.2V TYP @ IF=20 mA
LED COLOR: DOMINANT WAVELENGTH (λD): RED 640 nm TYP @ IF=20 mA
FORWARD VOLTAGE (VF): RED 2.2V TYP @ IF=20 mA

7. TE CONNECTIVITY LOGO, PART NUMBER, DATE CODE, COUNTRY OF ORIGIN AND AGENCY APPROVAL MARKING IN APPROXIMATE LOCATION SHOWN.

8. THE PART IS RECOMMENDED FOR WAVE SOLDERING PROCESS, PREHEAT TEMPERATURE IS 120°C TO 160°C, 120 SECONDS TO 180 SECONDS, PEAK WAVE SOLDERING TEMPERATURE IS 260°C MAX, 10 SECONDS MAX.

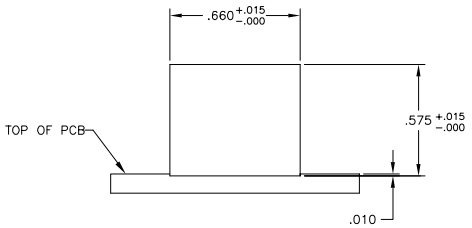

Suggested Panel Cutout

415ETP1 SERIES MAGNETIC CIRCUIT 3 5

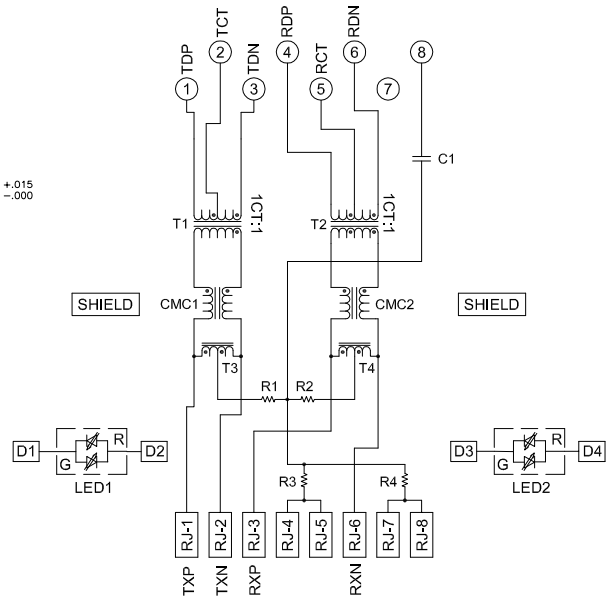

C1 = 1000 pF, 2kV CAPACITOR

R1-R4 = 75 OHMS, 1/16 W RESISTORS

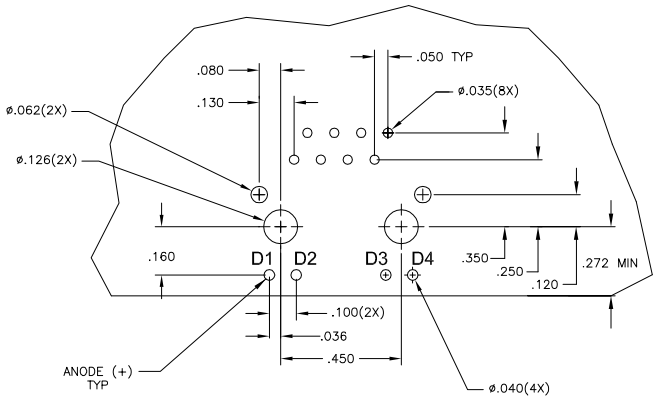

Suggested PCB Layout
(Component Side)

GREEN/RED	GREEN/RED	6-6605457-4
LED1 6	LED2 6	PART NUMBER

THIS DRAWING IS A CONTROLLED DOCUMENT.

DIMENSIONS: INCHES
TOLERANCES UNLESS OTHERWISE SPECIFIED:
0 PLC ± -
1 PLC ± -
2 PLC ± .010
3 PLC ± .005
4 PLC ± -
ANGLES ± -
MATERIAL 1
FINISH 1

DWN A. FERNANDEZ 04MAR2005
CHK D. FAROLE 04MAR2005
APVD D. FAROLE 04MAR2005
PRODUCT SPEC 108-2100
APPLICATION SPEC —
WEIGHT —

TE Connectivity

NAME 1X1 MAG45(TM), MODULAR JACK, 4N2ETP1 INDUSTRIAL TEMP SCHEMATIC, 415ETP1 MAGNETIC CIRCUIT, SHIELDED, DECOUPLING CAPACITOR, BI-COLOR LEDS

SIZE	CAGE CODE	DRAWING NO	RESTRICTED TO
A1	00779	C-6605457	—

CUSTOMER DRAWING SCALE NTS SHEET 1 OF 1 REV C