MATERIAL No	PERFORMANCE LEVEL	PLATING	CONTACT SEQUENCE/ROW	DIM "L" mm	HOUSING TOP NO.	QTY	HOUSING BOTTOM NO.	QTY	CONTACT NO	QTY	MOUNTING CLIP NO.	QTY	FLUX PROOF	FLUX PROOF	MARKING
850420268	G2/0=CONTACT AREA LEVEL 2/TERMINATION TIN	Au+Ni	1,2,3...32 a+c	2.9	365220001	1	365220003	1	365230014	64	NO	-	NO	NO	STANDARD
850429026	G4/0=CONTACT AREA LEVEL 4/TERMINATION TIN	Au+Ni	1,2,3...32 a+c	2.9	365220001	1	365220003	1	365230031	64	NO	-	NO	NO	STANDARD

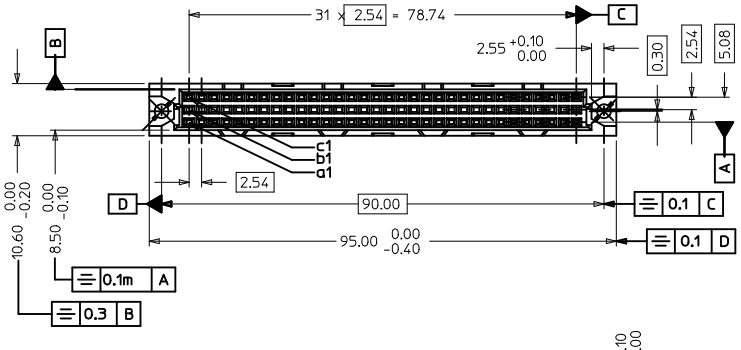

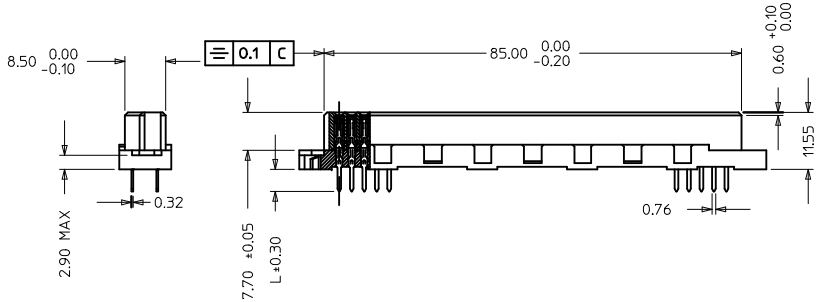

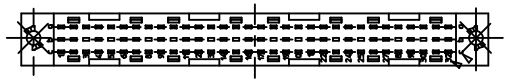

VIEW ON MATING SIDE

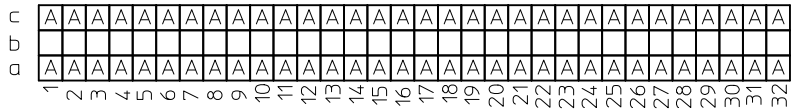

NOTES :-

1) MATERIALS: POLYESTER (PBT), 30% GLASS FILLED, UL94V-0.
COLOUR: PEBBLE GREY RAL 7032
OR ENGINEERING APPROVED EQUIVALENT

2) PRODUCT SPECIFICATION : PS-85042-0001

ENTER DESCRIPTION
EC NO: 12010-0404 2010/02/09
DRWN:SNS01 2010/02/15
CHKD:KPRASAD
APPR:KPRASAD 2010/02/16
DESCRIPTION
A
REV

QUALITY SYMBOLS
▼=0
Ⓒ=0

GENERAL TOLERANCES (UNLESS SPECIFIED)	mm	INCH
4 PLACES	± ---	± ---
3 PLACES	± 0.01	± ---
2 PLACES	± 0.08	± ---
1 PLACE	± 0.1	± ---
ANGULAR ± 2 °		

DRAFT WHERE APPLICABLE MUST REMAIN WITHIN DIMENSIONS

DIMENSION STYLE: MM ONLY
SCALE: 1:1
DESIGN UNITS: METRIC
THIRD ANGLE PROJECTION

DRAWN BY: HARSHA MR DATE: 2009/10/07
CHECKED BY: KPRASAD DATE: 2009/10/07
APPROVED BY: KPRASAD DATE: 2009/10/07

TITLE: ASSEMBLY, DIN 41612, C FEMALE, 64 POS 1.0MM PCB DIA

MOLEX INCORPORATED

MATERIAL NO.: SEE CHART
DOCUMENT NO.: SD-85042-268
SHEET NO.: 1 OF 2
SIZE: A2

THIS DRAWING CONTAINS INFORMATION THAT IS PROPRIETARY TO MOLEX INCORPORATED AND SHOULD NOT BE USED WITHOUT WRITTEN PERMISSION