PRODUCT NO
10042118-001LF

REV	DESCRIPTION	REV'D BY	DATE
A	RLSD ECR S05-0087	GL LOO	17MAR05

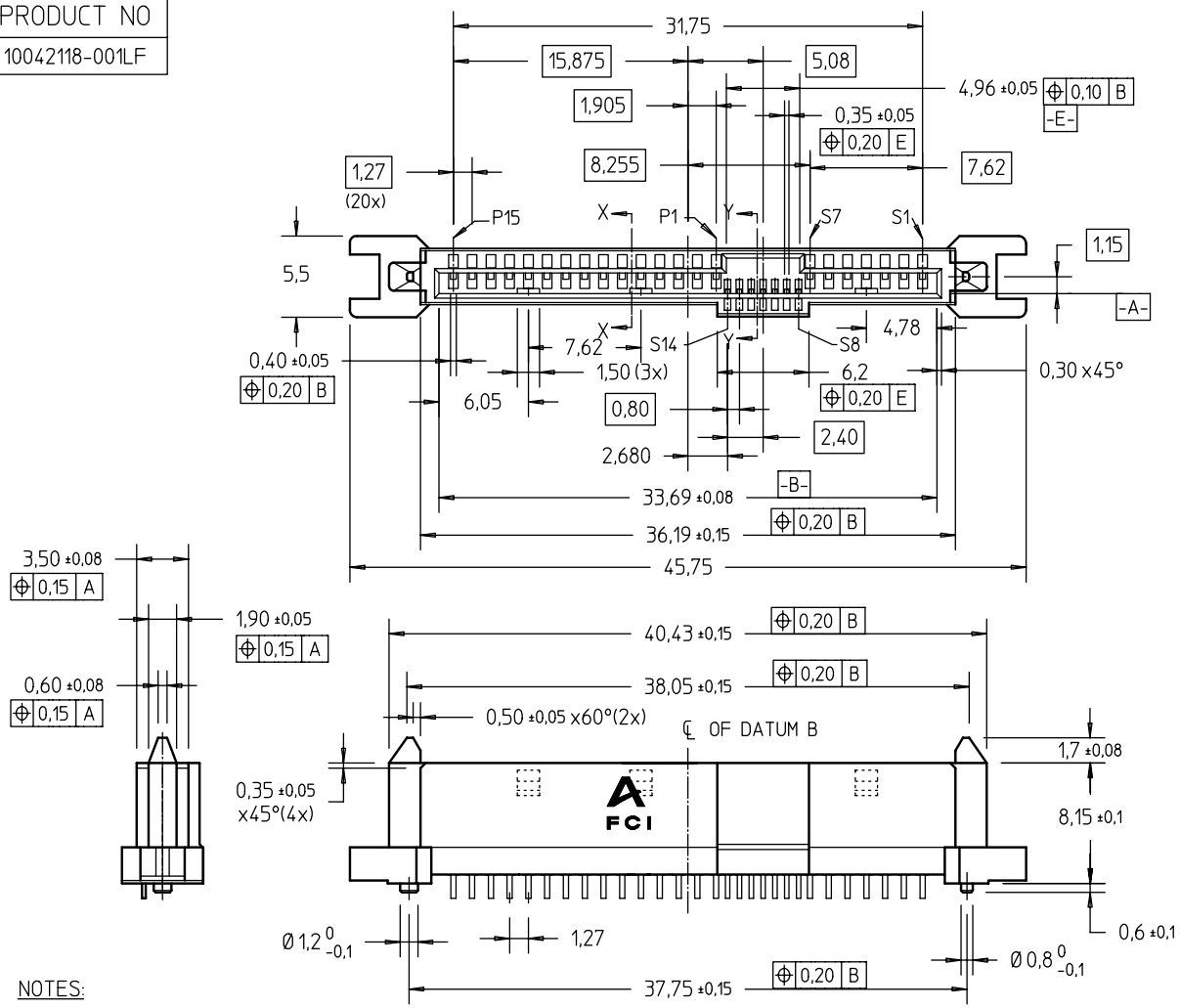

NOTES (Contd)

4 TRUE POSITION NOTES APPLY AT TERMINAL TIP

5 THE STD PACKAGING IS IN TRAY.

6 THE HOUSING WILL WITHSTAND EXPOSURE TO 260°C PEAK TEMPERATURE FOR 10 SECONDS IN A WAVE SOLDER APPLICATION WITH 1.57MM THICK CIRCUIT BOARD.

7 THIS PRODUCT MEETS EUROPEAN UNION DIRECTIVES AND OTHER COUNTRY REGULATIONS AS DESCRIBED IN GS-22-008.

8 PART NUMBERS ENDING IN "LF" MEANS FOR NOTE 7 LEAD FREE IDENTIFICATION.
XXXXXXXX-XXXLF IS EQUIVALENT TO PREVIOUS P/N XXXXXXXX-XXX

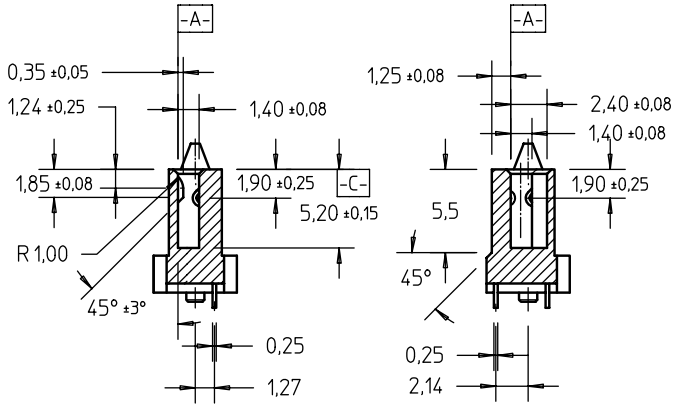

SEC X-X

SEC Y-Y

NOTES:

1 MATERIAL:
- 1) HOUSING : HIGH TEMP TERMOPLASTIC, UL 94V-0
  COLOR : BLACK
- 2) TERMINAL : COPPER ALLOY
- 3) HOLD DOWN : COPPER ALLOY

2 FINISH :
- 1) TERMINAL : 30u" Au PLATING (CONTACT POINT) OVER 50u" NICKEL
- 2) SOLDER TAIL : 50u" min Sn OVER 50u" NICKEL

3 PER SFF REV 1.1, EXCEPT 0.8mm PITCH BUMP AREA.

CUSTOMER COPY

GEN. TOLERANCES	DO NOT SCALE DWG. MM
LINEAR = ±0,20	
ANGLES = ±2°	

	NAME	DATE
DRAWN	GL LOO	17MAR05
CHECKED	GL LOO	17MAR05
APPROVED	JOEY NG	17MAR05

FCI

DESCRIPTION: SAS CABLE RECEP. CONNECTOR

PRODUCT NO. 10042118

SCALE 2 : 1 SHT 1 OF 1

FILE : 10042118C1revA

PDM: Rev:A STATUS: Released Printed: Apr 14, 2005