THIS COPY IS PROVIDED ON A RESTRICTED BASIS AND IS NOT TO BE USED IN ANY WAY DETRIMENTAL TO THE INTERESTS OF PANDUIT CORP.

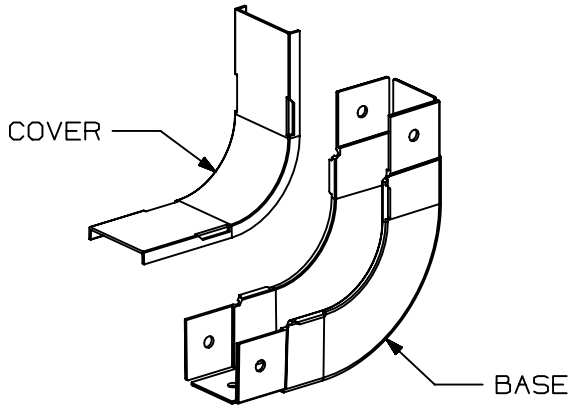

NOTES:

1. SEE CURRENT CATALOG FOR ADDITIONAL PART SUFFIXES TO INDICATE COLOR AND/OR PACKAGE QUANTITY.
2. THE FIBER-DUCT 2x2 AND FIBERRUNNER 2x2 INSIDE VERTICAL RIGHT ANGLE FITTING IS DESIGNED WITH A MINIMUM 2" (50.8) BEND RADIUS TO PROTECT FIBER OPTIC CABLES.
3. PARTS SUPPLIED:
   (1)- COVER
   (1)- BASE
4. DIMENSIONS IN PARENTHESES ARE IN METRIC.

PANDUIT PART NUMBER	WEIGHT	MATERIAL
FIVRA2X2**	0.30 LB/EACH (135g/EACH)	ABS
FIVRA2X2L**	0.30 LB/EACH (135g/EACH)	PC/ABS

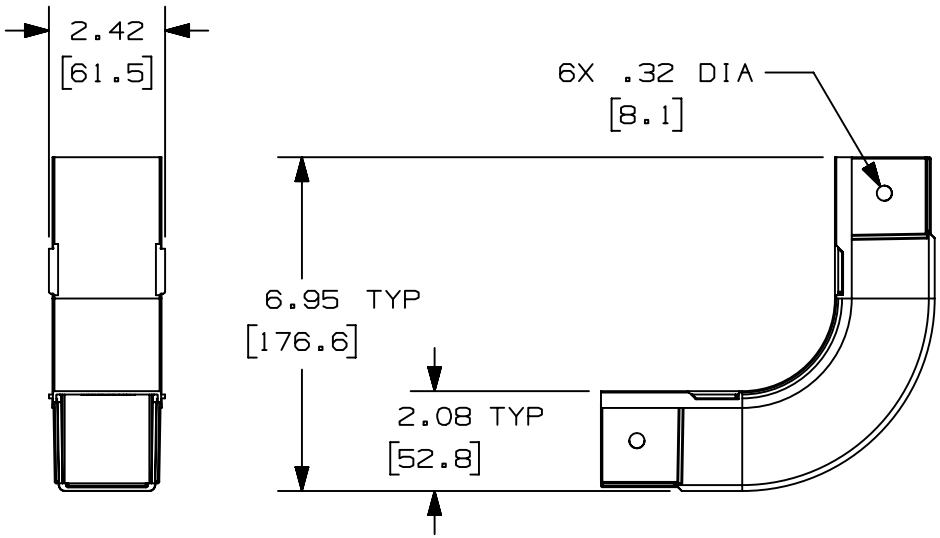

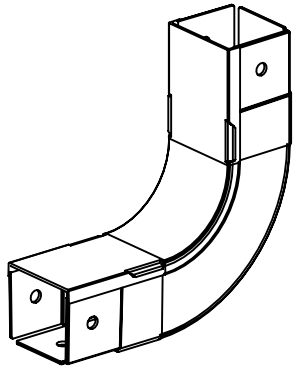

REV	DATE	BY	CHK	APR	DESCRIPTION	ECN
03B	8/28/20	MEX-JAGC	DWR	DWR	ADDED PART NUMBER UPDATED DRAWING BORDER & TITLE BLOCK	V09002DZ/11

TITLE
FIBER-DUCT 2x2 AND FIBERRUNNER 2x2 INSIDE VERTICAL RIGHT ANGLE FITTING - (FIVRA2X2**, FIVRA2X2L**)

CUSTOMER DRAWING

ITEM REVISION NAME: D35245BW/03

DATASET FILE NAME: D35245BW_DC/03B

PANDUIT

MATERIAL: SEE PART NUMBER TABLE ABOVE

THIRD ANGLE PROJECTION

DRAWING NUMBER: 35245-23

DRAWN BY	DATE	CHK	SCALE	SHT 1 OF 1	SIZE
PM	1/21/97	CEF	NONE		A

NXGLOBAL_ASIZE