RoHS Compliant

REV	SIGN	DATE	DESCRIPTION	APPROVER
B		10/23-18	Initial release	zhangcan

THIS IS CAD DRAWING, DO NOT REVISE MANUALLY!!!

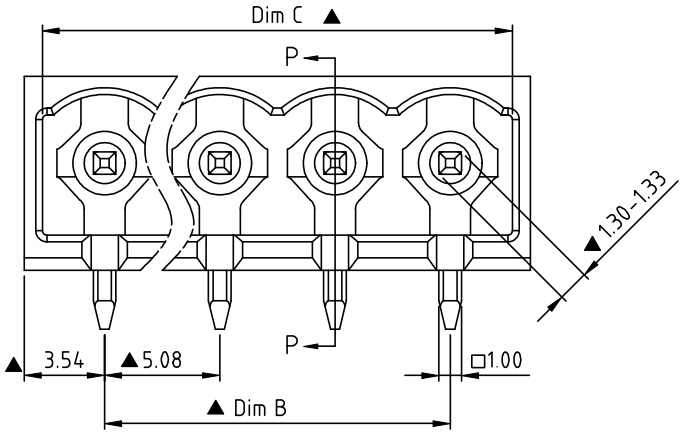

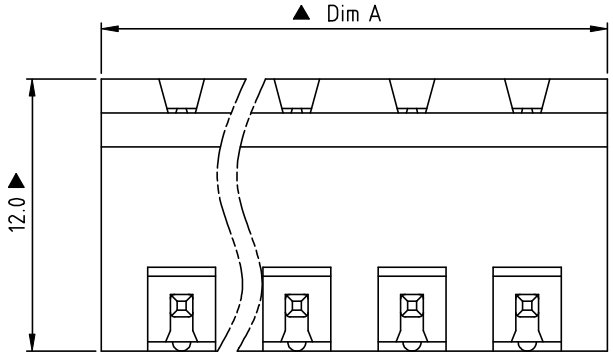

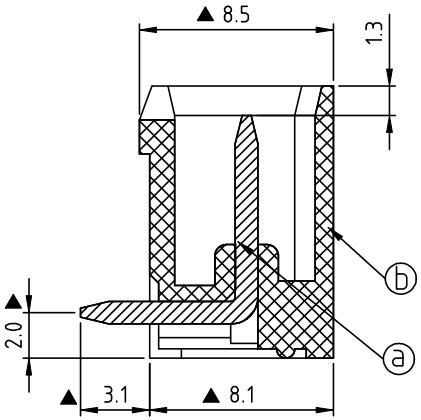

SECTION P-P

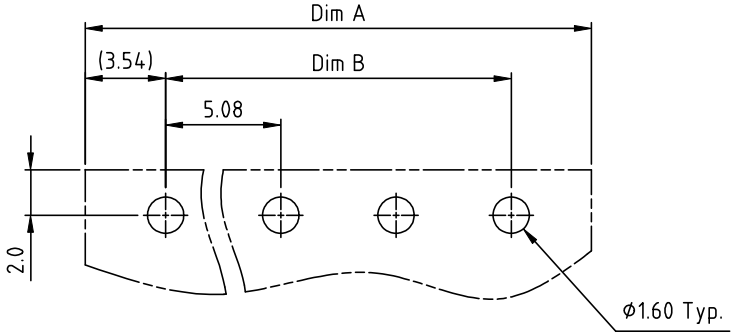

RECOMMENDED P.C.B LAYOUT

Material:

- Item ⓐ Contact pin: Copper Bright Tin plated over Nickel plated
- Item ⓑ Insulator(housing): Thermoplastic (UL94V-0)

Electrical: cULus

- Voltage rating: 300V
- Current rating: 20A
- Withstanding Voltage: 1.6 KV
- Operating temperature: -40°C to +115°C
- Wave soldering temperature: 260°C±5°C/5 Sec
- Safety Approval: c UL us
- Critical dimension: ▲

OQ xx 5 4 x A xxxx G

No. OF POLES
02: 2 POLES
⋮
24: 24 POLES

COLOR
0 Black (RAL9005)
2 Red (RAL3001/D)
3 Orange(RAL2011/P)
4 Yellow(RAL1018/A)
5 Green(RAL6018/T)
6 Blue (RAL5015/A)
8 Grey(RAL7035/D)
9 White(RAL1102)
C Green(RAL6018/U)

0000 "@" Logo
000A "ANY" Logo
... ...
Any special item by customer request, please contact sales department

G RoHS compliant (lead<4%) In copper Alloy

DIMENSION

Dim A	(N-1) × 5.08+7.08
Dim B	(N-1) × 5.08
Dim C	(N-1) × 5.08+5.48

N = Number of poles

Poles	Tolerance (Dim.A&B&C)
2p-6p	±0.15
7p-12p	±0.25
13p-16p	±0.35
17p-24p	±0.40

Amphenol ANYTEK

CUSTOMER COPY

ALL RIGHTS RESERVED. REPRODUCTION OR ISSUE TO THIRD PARTIES IN ANY FORM WHATEVER IS NOT PERMITTED WITHOUT WRITTEN AUTHORITY FROM THE PROPRIETOR. PROPERTY OF ANYTEK TECHNOLOGY CO., LTD

TITLE	OQ 5.08mm 90° Close Series 2p-24p 反向折彎				
PART NO.	OQxx54xAxxxxG			DWG NO.	80Q07461
APPROVED	CHECKED	DESIGNED	DRAWN	CUST NO.	
		zhangcan 10/23-18	zhangcan 10/23-18	UNIT: mm	
				SCALE: NONE	
				SHEET: 01/01	REV.: B

Tolerance	
X.	±0.50
X.X	±0.30
X.XX	±0.10
X°	±1°