THIS COPY IS PROVIDED ON A RESTRICTED BASIS AND IS NOT TO BE USED IN ANY WAY DETRIMENTAL TO THE INTERESTS OF PANDUIT CORP.

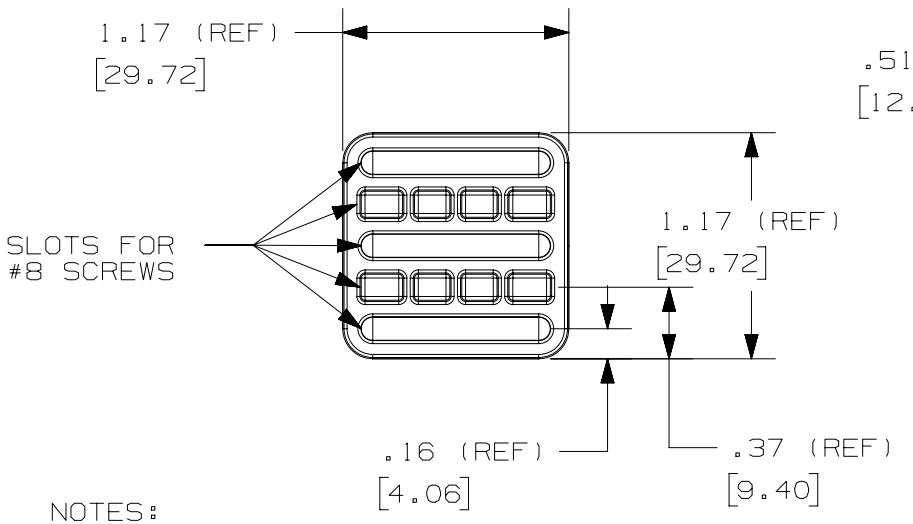

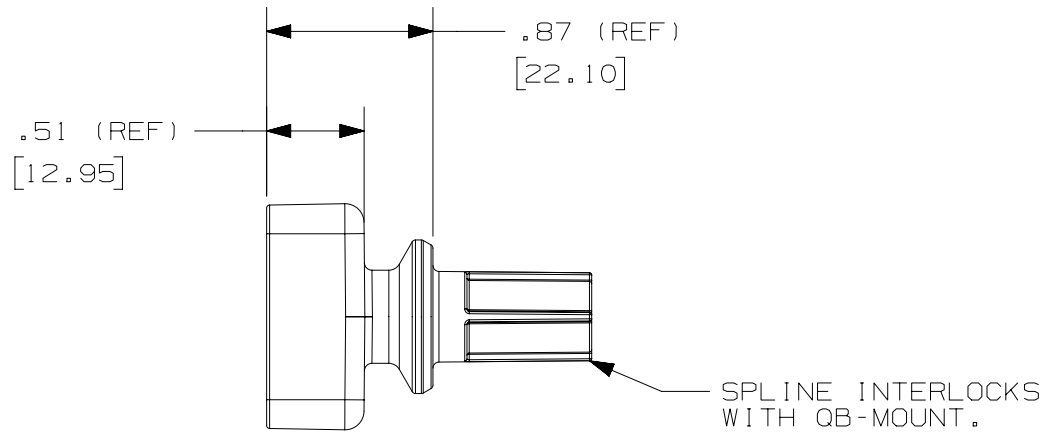

NOTES:

1. DIMENSIONS IN BRACKETS [ ] ARE METRIC [mm].
3. PRODUCT DESIGNED TO BE INSERTED INTO PANDUIT PART: QB-MOUNT.
4. PRODUCT IS DESIGNED TO SUPPORT A MAXIMUM STATIC LOAD OF 5 LBS.
5. PRODUCT IS RATED FOR ENVIRONMENTAL CONDITIONS OF 40-100°F IN ALL HUMIDITY RANGES.
6. REFER TO PANDUIT CATALOG FOR LIST OF COMPATIBLE ACCESSORIES.
7. COMPATIBLE WITH FOLLOWING SCREWS: QB-S8-500-C, QB-S8-750-C.

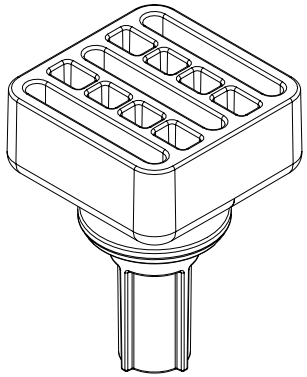

REV	DATE	BY	CHK	APR	DESCRIPTION	ECN
00	06-09-15	ANF	DJW	MSAD	DRAWING RELEASED	GAECN03011

TITLE

QUICK-BUILD MOUNTING BASE; 1.20" X 1.20"; ACCEPTS #8 SCREWS; 25 PER PACKAGE
QB-BASE120

CUSTOMER DRAWING

ITEM REVISION NAME: 14L203DM/02

DATASET FILE NAME: 14L203DM-DC

PANDUIT

UNLESS OTHERWISE SPECIFIED, DIMENSIONAL TOLERANCES ARE: IN [mm]

.X ± .1 [2.54] .XXX ± .005 [.127]
.XX ± .01 [.25] ANGLES ± 5 °

THIRD ANGLE PROJECTION

MATERIAL: NYLON

DRAWING NUMBER: 14L203DM-DC

DRAWN BY	DATE	CHK	SCALE		SIZE
ANF	6/9/15	DJW	1:1	SHT 1 OF 1	A