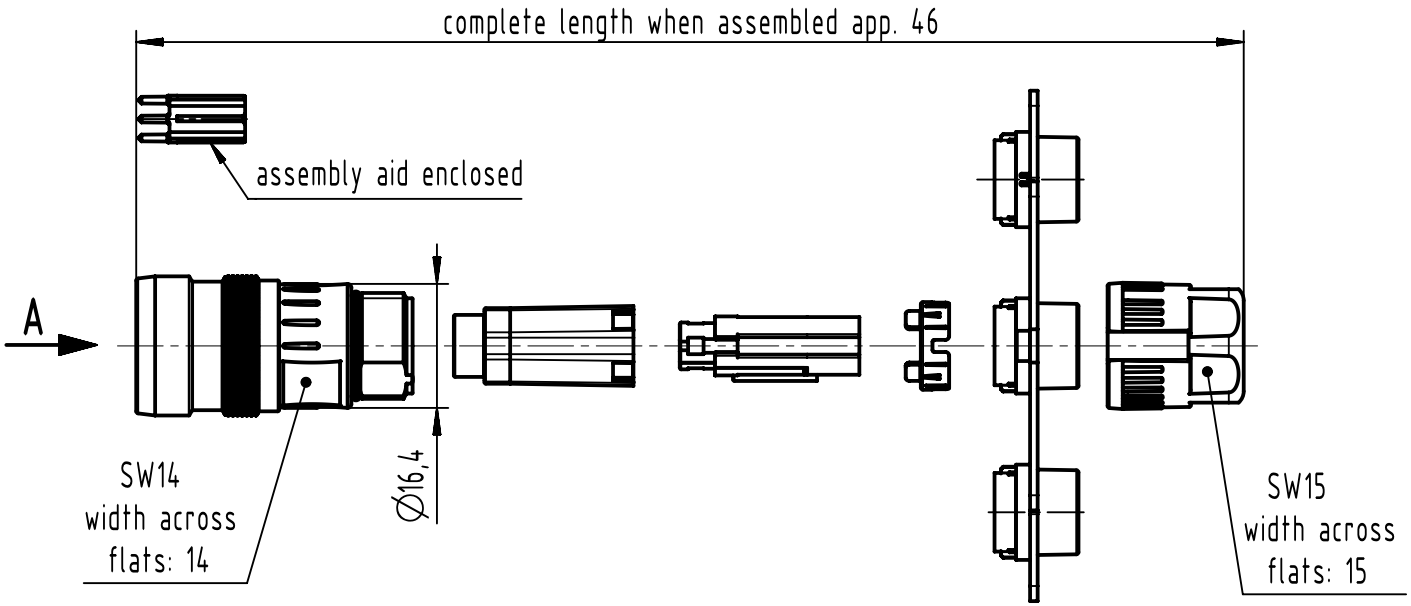

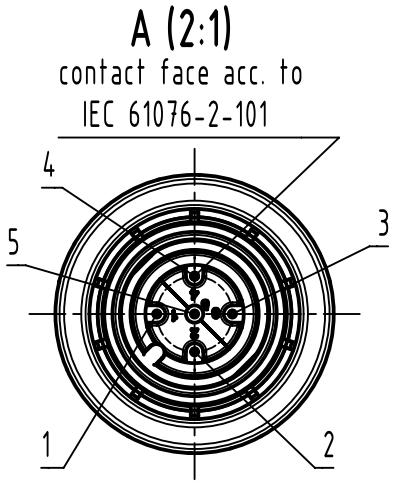

order contacts separately

cable Ø	wire gauge	contact part number
5,7-8,8mm	AWG 26-22	09 67 000 5576
	AWG 24-20	09 67 000 8576
	AWG 22-18	09 67 000 3576

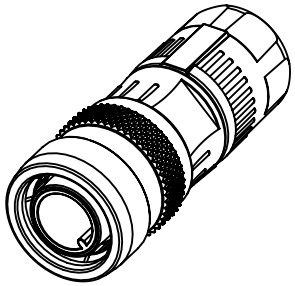

All Dimensions in mm
Original Size DIN A4

Scale 1:1

Free size tol.

Ref.

Sub.

All rights reserved

Department EL PD

Created by BALSAN

Inspected by FARCASIU

Standardisation 302077

Date 2020-12-22

State Final Release

Title M12 PushPull 5-pole A-coded male

Doc-Key / ECM-Nr. 100623042/UGD/000/G 500000186658

HARTING
D-32339 Espelkamp

Type TB

Number 21038211530

Rev. G

Page 1/1

A4