SHEET OF

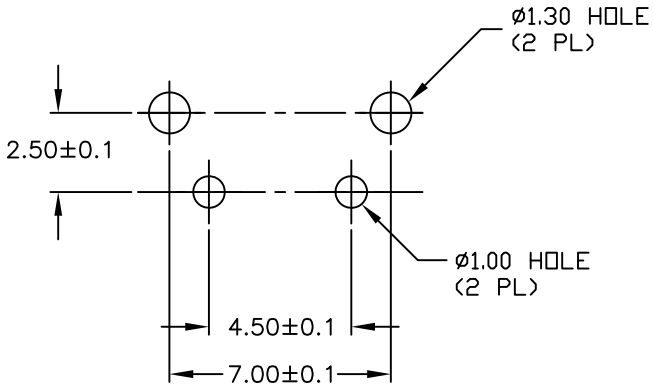

RECOMMENDED P.C.B. LAYOUT

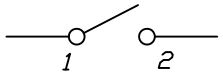

CIRCUIT: SPST

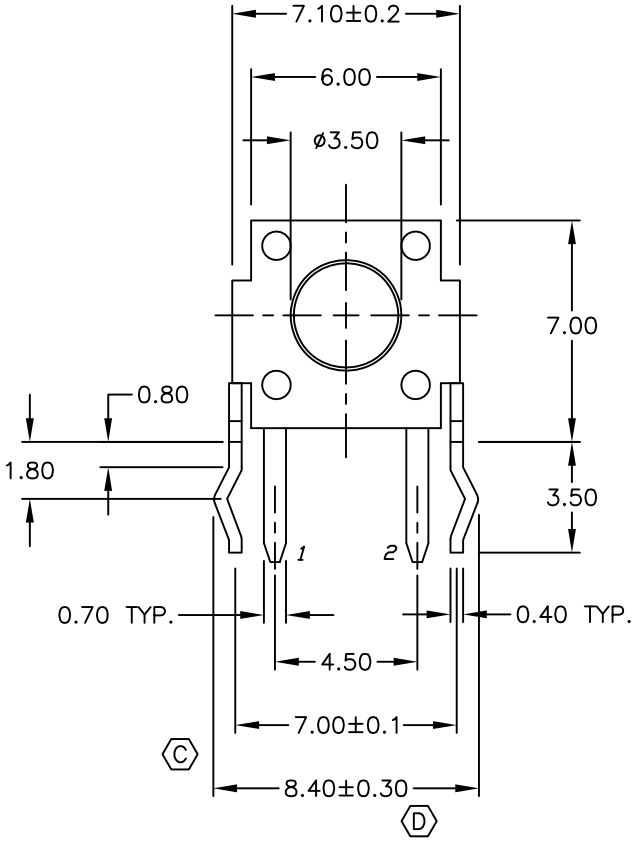

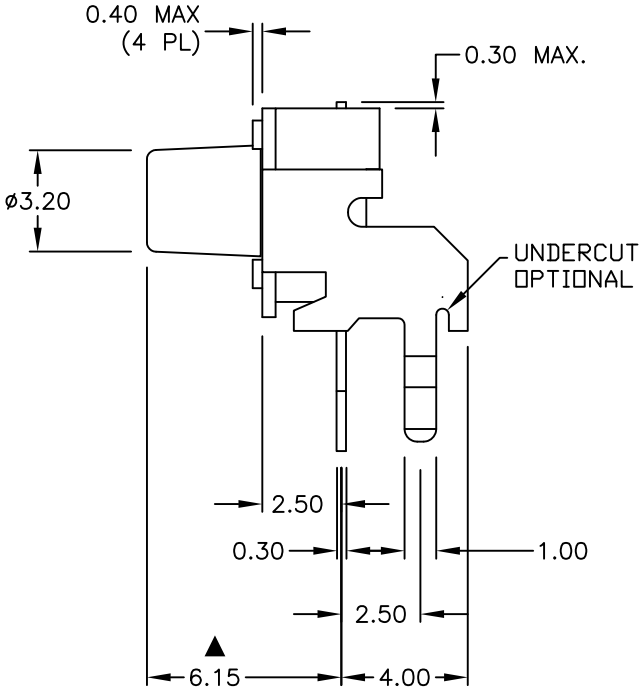

NOTES:

1. ALL DIMENSIONS IN MM
2. GENERAL TOLERANCE: X.X=±0.4
   X.XX=±0.25
3. TERM. NOS. FOR REF. ONLY
4. RATING: 50mA, @12V DC
5. TRAVEL: 0.25±0.1mm
6. ▲ OPERATING FORCE: 250±50gf
7. CONTACT RESISTANCE: 100 milliohms Max.
8. ELECTRICAL LIFE: 100,000 CYCLES MIN.
9. ▲ DESIGNATE MAJOR FEATURE
10. ▲ ACTUATOR COLOR: RED
11. HOUSING COLOR: BLACK

REV.	ECN No.	DESCRIPTION	DATE	CHKD
D	19502	ADD TOLERANCE	12/08/10	BGL
C	14400	REMOVE TOL. & ADD TO 7.00 DIM	10/13/04	AR
B	12370	REVISED AND REDRAWN	12/10/02	CJB

THE INFORMATION CONTAINED IN THIS DOCUMENT
IS PROPRIETARY TO E-SWITCH AND IS
NOT TO BE COPIED OR TRANSFERRED

E-SWITCH®

TITLE: TL1105RF250Q

SCALE	DATE	DR	DWG	REV
4:1	5/11/02	RJC	P021222	D